ARTICLE 1 TITLE, SCOPE AND JURISDICTION

101 Title

102 Purpose

103 Authority

104 Administration

105 Jurisdiction

106 Relation to Other Laws Co-operation

108 Planned Unit Development Encouraged: Regulations may be Modified

109 Amendments

110 Separability

ARTICLE 2 DEFINITIONS

ARTICLE 3 THE PRELIMINARY DESIGN PLAN

301 Pre-Conference

302 The Preliminary Design Plan Option

303 Submission to Ohio Department of Transportation (ODOT)

304 Application for Preliminary Design Plan Approval

305 Preliminary Design Plan Form

306 Preliminary Design Plan Contents

307 Supplementary Information

308 Filing

309 Approval of Preliminary Design Plan

310 Approval Period

311 Public Hearing

ARTICLE 4 THE FINAL PLAN

401 Final Plat Required

402 Application for Approval of Final Plat

403 Regulations Governing Improvements

404 Final Plat Form

405 Final Plat Contents

406 Supplementary Information

407 Filing

408 Approval of Final Plat

409 Transmittal of Copies and Recording

410 Minor Subdivision (Lot Splits)

411 Greene County Regulations of the Transfer of Land Without a Subdivision

412 The Transfer of More than Five Acres

413 Building Permits

414 Administrative Approval of Replats

ARTICLE 5 SUBDIVISION DESIGN STANDARDS

501 General

502 Conformity to Development Plans and Zoning

503 Suitability of Land

504 Street Design

505 Street Names

506 Street Design Standards for Cul-de-Sacs and Loop Type Local Streets

507 Street Design Standards for all Local Streets Except Cul-de-Sacs and Loop Type Streets

508 Collector Street Design Standards

509 Official Thoroughfare Design Standards

510 Horizontal Alignment

511 Vertical Alignment

512 Intersection Design Standards

513 Special Street Types

514 Streets for Commercial Subdivisions

515 Streets for Industrial Subdivisions

516 Sidewalks

517 Blocks

518 Lots

519 Easements

520 Physical Considerations

521 Flood Plain

522 Public Ownership of Storm Drainage Channels

523 Dedication of Parks and Open Space

ARTICLE 6 REQUIREMENTS FOR PLANNED DEVELOPMENT

601 General

602 Standards

603 Conformity to Existing Streets and Thoroughfare Plan

604 Private Streets

605 Public Streets

606 Staging of Residential Planned Development

607 Common Open Space Guarantee

608 Staging of Nonresidential Construction

609 Condominiums

ARTICLE 7 FOR FUTURE EXPANSION

ARTICLE 8 REQUIREMENTS FOR CONSTRUCTION OF IMPROVEMENTS

801 Bond for Installation of Improvements

802 Construction Procedure and Materials

803 Survey Monuments

804 Plans and Profiles

805 Recommended Order of Construction for Proposed Streets

806 Clearing and Subgrade Preparation

807 Street Standards

808 Street Surface Construction

809 Base Construction Specifications

810 Storm Sewer Design

811 Pipe Culvert Design

812 Pipe Requirements

813 Bridge Structures

814 Catch Basins

815 Storm Manholes

816 Headwalls

817 Pipe Culvert Ends

818 Rock Channel Protection

819 Storm Sewer Construction Specifications for Excavation

820 Curb and Gutter and Sidewalks

821 Curb Cuts

822 Water Supply Improvements

823 Fire Protection

824 Sanitary Sewer Improvements

825 Electric, Gas, and Telephone Improvements

826 Over-Size and Off-Site Improvements

827 Cost of Over-Size Improvements

828 Extension to Boundaries

829 Off-Site Extensions

ARTICLE 9 REVISIONS, ENFORCEMENT

901 Recording of Plat

902 Revision of Plat After Approval

903 Sale of Land Within Subdivision

904 Schedule of Fees, Charges, and Expenses

905 Penalties

906 Variances

907 Appeal

ARTICLE 10 ENACTMENT

SECTION 1001 Effective Date

ARTICLE 1

TITLE, SCOPE AND JURISDICTION

SECTION 101 TITLE

These regulations shall be known and may be cited and referred to as the "Subdivision Regulations for Greene County, Ohio," and shall hereinafter be referred to as "these regulations."

SECTION 102 PURPOSE

The foregoing rules and regulations are adopted to secure and provide for:

A. The proper arrangement of streets or highways in relation to existing or planned streets or highways and to the Official Thoroughfare Plan.

B. Adequate and convenient open spaces for vehicular and pedestrian traffic, utilities, access of fire fighting apparatus, recreation, light and air.

C. The avoidance of congestion of population.

D. Facilitation of the orderly and efficient layout and the appropriate use of the land.

E. Improving the quality of life through protection of Greene County's total environment, including but not limited to the prevention of air, water and noise pollution.

F. The accurate surveying of land, preparing and recording of plats and the equitable handling of all subdivision plats by providing uniform procedures and standards for observance by both the approving authority and subdividers.

SECTION 103 AUTHORITY

The Ohio Revised Code, Section 711.001 et seq., enable the Board of County Commissioners and the Regional Planning and Coordinating Commission of Greene County to adopt regulations governing plats and subdivisions of land within their jurisdiction.

SECTION 104 ADMINISTRATION

These regulations shall be administered by the Regional Planning and Coordinating Commission of Greene County, hereinafter to be referred to as "RPCC".

SECTION 105 JURISDICTION

These regulations shall be applicable to all subdivisions of land within the unincorporated area of Greene County, other than land within three miles of a city as provided in Section 711.09 of the Ohio Revised Code. The RPCC of Greene County shall have the power of final approval of the plat. Whenever a city within Greene County has adopted a major thoroughfare plan, parks and public open space plan for territory within the city limits and for territory within the three mile limit of the city or any portion thereof, has adopted subdivision regulations, and is exercising extra-territorial jurisdiction, the City planning commission may receive advice from the RPCC corporate limits. The RPCC and the city with subdivision regulation jurisdiction over unincorporated territory within Greene County may co-operate and agree by written agreement that the approval of a plat by the city, as provided in Section 711.09 of the Ohio Revised Code, shall be conditioned upon receiving advice from or approval by the RPCC. Any city or village in Greene County may contract with the RPCC for subdivision review services within the incorporated or extra-territorial jurisdiction.

SECTION 106 RELATION TO OTHER LAWS

The provisions of these regulations shall supplement any and all laws of the State of Ohio, resolutions of the County or any and all rules and regulation promulgated by authority of such law or resolutions relating to the purpose and scope of these regulations. Whenever the requirements of these regulations are at variance with the requirements of any other lawfully adopted rules, regulations, ordinances, or resolutions, the most restrictive or that imposing the higher standards shall govern except as provided in Section 108 of these regulations. Whenever a township or part thereof has adopted a zoning plan under the provisions of Section 519, Ohio Revised Code, all proposed subdivisions shall meet the requirements of said zoning plan, as well as the provisions of these regulations.

SECTION 107 CO-OPERATION

The RPCC of Greene County may co-operate with any city or village located in Greene County in the review of subdivision plats occurring in lands adjoining the corporation line of said city or village or within a reasonable distance of same. The Commission may, as a condition for such co-operation, and in order to carry out the regulations more effectively, seek an agreement with any municipal corporation. The terms of the agreement may permit joint review by the RPCC of Greene County and municipality of subdivisions occurring next to the corporate limits of said municipality or within the corporate limits of the municipality.

SECTION 108 PLANNED UNIT DEVELOPMENT ENCOURAGED: REGULATIONS MAY BE MODIFIED

The planned unit development approach to development is greatly encouraged. These regulations may be modified by the degree necessary to accomplish the objectives and standards required for the planned unit development of residential, commercial, or industrial subdivisions, or a mixture thereof, in accordance with the appropriate Township Zoning Resolution. Nothing within this section, however, shall exempt the developer from the requirements of subdivision plat approval as specified in Article 3 and 4 of these regulations.

SECTION 109 AMENDMENTS

The RPCC of Greene County may on its own motion and after public hearing, amend, supplement, or change these regulations. However, the RPCC may only amend, supplement or change these regulations requiring the actual construction of improvements or performance guarantees after review and adoption by the County Board of Commissioners. Notice shall be given of the time and place of such public hearing by publication in at least one newspaper of general circulation published in Greene County, Ohio, thirty (30) days prior to holding of said hearing and shall appear twice within the 30 day period. The amendment or amendments shall be on file in the office of the Commission for public examination during said thirty (30) days.

SECTION 110 SEPARABILITY

If, for any reason, any clause, sentence, paragraph, section or other part of these regulations should be decided by a court of competent jurisdiction to be invalid, such judgment shall not affect the validity of these regulations as a whole, or any part thereof, other than the part so held to be invalid.

ARTICLE 2

DEFINITIONS

All words in this resolution shall have their customary meanings as defined in Websters New World Dictionary, except those specifically defined in this Section.

A. The word "person" include a firm, association, organization, partnership, trust, company, or corporation as well as an individual.

B. The present tense includes the future tense, the singular number includes the plural, and the plural number includes the singular.

C. The work "shall" is a mandatory requirement, the word "may" is a permissive requirement, and the word "should" is a preferred requirement.

D. The words "used" or "occupied" include the words "intended, designed, or arranged to be used or occupied.

E. The word "lot" includes the words "plot" or "parcel."

1. ALLEY (See Thoroughfare)

2. BLOCK

A parcel of land bounded on all sides by a street or streets.

3. BUILDING LINE (See Setback Line)

4. CEMETERY

Land used for or intended to be used for the burial of animal or human dead and dedicated for cemetery purposes, including crematories, mausoleums, and mortuaries if operated in connection with and within the boundaries of such cemetery.

5. COMPREHENSIVE DEVELOPMENT PLAN

A plan or any portion thereof, adopted by the RPCC of Greene County and/or the legislative authority of Greene County showing the general location and extend of present and proposed physical facilities including housing, industrial and commercial uses, major streets, parks, schools, and other community facilities. This plan establishes the goal, objectives and policies of the community.

6. CORNER LOT (See Lot Types)

7. COUNTY

Greene County, State of Ohio.

8. COUNTY ENGINEER

The County Engineer of Greene County.

9. COUNTY SANITARY ENGINEER

The County Sanitary Engineer of Greene County.

10. COVENANT

A written promise or pledge.

11. CROSSWALK

A ten (10) foot right-of-way, publicly owned, cutting across a block in order to provide pedestrian access to adjacent street or property.

12. CUL-DE-SAC (See Thoroughfare)

13. CULVERT

A transverse drain that channels under a bridge, street, or driveway.

14. DEAD-END STREET (See Thoroughfare)

15. DENSITY

A unit of measurement; the number of dwelling units per acre of land; to be used in road design and not to be confused with sanitary sewer and water design density.

A. Gross Density - the number of dwelling units per acre of the total land to be developed.

B. Net Density - the number of dwelling units per acre of land when the acreage involved includes only the land devoted to residential uses, excludes such areas as street right-of-way, parks and other similar uses.

16. DENSITY, LOW RESIDENTIAL

Land to be utilized for residential purposes, including public housing and industrial units, which does not exceed three (3) dwelling units per gross acre.

17. DENSITY, MEDIUM-LOW RESIDENTIAL

Land to be used for residential purposes, including public housing and industrialized units, which does not exceed six (6) dwelling units per gross acre. For the purpose of street design requirements, the medium-low density residential classification shall be considered as medium density

18. DENSITY, MEDIUM RESIDENTIAL

Land to be utilized for residential purposes, including public housing and industrialized units, which does not exceed eight (8) dwelling units per acre.

19. DENSITY, MEDIUM-HIGH RESIDENTIAL

Land to be utilized for residential purposes, including public housing and industrialized units, which does not exceed twelve (12) dwelling units per gross acre. For the purpose of street design requirements, the medium-high density residential classification shall be considered as high density.

20. DENSITY, HIGH RESIDENTIAL

Land to be utilized for residential purposes, including public housing and industrialized units, which does not exceed thirty-two (32) dwelling units per gross acre.

21. DEVELOPER

Any individual, subdivider, firm, association, syndicate, partnership, corporation, trust, or any other legal entity commencing proceedings under these regulations to effect a subdivision of land hereunder for himself or for another.

22. DWELLING

Any building or portion thereof occupied or intended to be occupied exclusively for residential purposes, but not including a tent, cabin, trailer coach or other temporary or transient structure of facility.

A. Single Family

A building occupied or constructed to be occupied exclusively for residential purposes by one family or housekeeping unit.

B. Two Family

A building occupied or constructed to be occupied exclusively by not more than two (2) families or housekeeping units, including condominiums, which may be either attached side-by-side or one over the other. Each unit must have a separate entrance.

C. Multiple Family

A building or portion thereof occupied or constructed to be occupied by more than two (2) families or housekeeping units, including condominiums, townhouses, or garden apartments with varying arrangements of entrance and party wall.

23. DWELLING GROUP

A group of two (2) or more detached dwellings located on a parcel of land in one ownership and having any yard or court in common.

24. DWELLING UNITS

One room, or a suite of two (2) or more rooms, designed for or used by one family or housekeeping unit for living and sleeping purposes and which includes permanently installed cooking and lawfully required sanitary facilities.

25. EASEMENT

Authorization by a property owner for the use by another, and for a specified purpose, of any designated part of his property.

26. ENGINEER

Any person registered to practice professional engineering by the state board of registration as specified in Section 4733.14 of the Ohio Revised Code.

27. FILL

Soil, rock, earth, sand, gravel, or any other material which may be deposited or placed onto or into the ground.

28. FILLING

The act of depositing or dumping of any fill onto or into the ground, except common household gardening and ground care.

29. FLOOD, 100-YEAR

The temporary inundation of normally dry land areas by a flood that is likely to occur once every 100 years (i.e., that has a one percent (1%) chance of occurring each year, although the flood may occur in any year).

24. FLOOD PLAIN, REGULATORY

That land area of Greene County which is subject to inundation by the 100-year flood as determined by the Flood Insurance Study: Unincorporated Areas of Greene County, Ohio prepared by the Federal Emergency Management Agency. (See Illustration)

31. FLOODWAY

That portion of the regulatory flood plain which is required to carry and discharge the flood waters of the 100-year flood without obstruction as designated in the Flood Insurance Study: Unincorporated Areas of Greene County, Ohio. (See Illustration)

32. FLOODWAY FRINGE

That portion of the regulatory flood plain which serves primarily as a storage area for the flood waters of the 100-year flood as designated in the Flood Insurance Study: Unincorporated Areas of Greene County, Ohio. (See Illustration)

33. FLOOR AREA, NON-RESIDENTIAL

The sum of the gross horizontal area of all the floors of a non-residential building measured from the interior faces of the interior walls excluding stairs, washrooms, elevator shafts, maintenance shafts, and similar areas.

34. FRONTAGE

The distance between the side lot lines measured along the required front setback lines; and (2) in the case of a corner lot where frontage shall be measured along the shortest front lot line. Property lines which abut limited access roads shall not be construed to be included within any calculation of frontage. (See Illustration)

35. HIGHWAY DIRECTOR

The Director of the Ohio Department of Transportation.

36. IMPROVEMENTS

Street pavement or resurfacing, curbs, gutters, sidewalks, water lines, sanitary sewer lines, storm sewer lines, storm drains, street lights, flood control and drainage facilities, utility lines, landscaping, and other related matters normally associated with the development of raw land into building sites.

37. LOCATION MAP (See Vicinity Map)

38. LOT

A piece or parcel of land occupied or intended to be occupied by a principal building or a group of such buildings and its accessory buildings and uses, including all open spaces required by the zoning regulations and of sufficient size to meet minimum zoning requirements for use, coverage, and area. Such lot shall have frontage on, and direct access to an improved public street.

A. Cover

A lot abutting upon two (2) or more streets at their intersection or upon two parts of the same street, and in either case forming an interior angle of one-hundred thirty-five (135) degrees or less.

B. Interior Lot

A lot other than a corner lot with only one frontage on a public street.

C. Double Frontage Lot

A lot having a frontage on two (2) non intersecting streets, as distinguished from a corner lot.

39. LOT AREA

The total computed area contained within the lot lines exclusive of any portion within the right-of-way of any public street.

40. LOT COVERAGE

That percentage of a lot which viewed directly from above, would be covered by a structure or structures, or any part thereof, excluding projecting roof eaves of less than two feet.

41. LOT FRONTAGE

The distance between the side lot lines, measured by a line drawn parallel with the front lot line at a point of required minimum front yard depth, to conform to local zoning. For the purpose of determining yard requirements on corner lots and double frontage lots, all sides of a lot adjacent to streets shall be considered frontage.

42. LOT LINES

Lines bounding the lot as shown in the accepted plat or survey record. (See Illustration)

A. Front, Lot Line

A street right-of-way line forming the boundary of a lot. On a corner lot, the street right-of-way with the least amount of street frontage shall be the front lot line.

B. Rear, Lot Line

The lot line that is most distant from, and most nearly parallel to, the front lot line. If a rear lot line is less than fifteen (15) feet long, or if the lot comes to a point, the rear lot line shall be a line at least fifteen (15) feet long, lying wholly within the lot parallel to and a maximum distance from the front lot line. In the case of a corner lot, the rear lot line shall be the line opposite the shortest front lot line.

C. Side, Lot Line

A lot line which is neither a front lot line nor a rear lot line. On a corner lot, the street right-of-way line with the greatest amount frontage shall be a side lot line.

43. LOT, NON-CONFORMING

A lot existing at the time of enactment of these Regulations or any subsequent amendments which does not conform to the lot area and frontage requirements of the zoning district in which it is located, or these regulations.

44. LOT OF RECORD

A lot which is part of a subdivision, the plat of which has been recorded in the office of the Recorder of Greene County; or a parcel of land, the deed to which was of record as of the effective date of these regulations.

45. MAINTENANCE BOND

An agreement by a subdivider or developer with the County guaranteeing the maintenance of the physical improvements for a period of one (1) year from the release of the performance bond.

46. MINOR SUBDIVISION

A division of a parcel of land that does not require a record plan to be approved by the RPCC as specified in 711.131 of the Ohio Revised Code. Also known as a Lot Split.

47. MONUMENTS

Permanent concrete or iron markers used to establish definitely all lines of the plat of a subdivision, including all lot corners, boundary line corners, and points of change in street alignment.

48. MOBILE HOME

A "mobile home" means a house trailer as defined in Section 4501.01 of the Ohio Revised Code.

49. OFFICIAL THOROUGHFARE PLAN

The Official Thoroughfare Plan, and shall be known as Perspectives: Thoroughfare Plan for Greene County, Ohio establishing the official right-of-way width of major streets on file in the office of the Recorder of Greene County, Ohio, and in the office of the RPCC together with all amendments thereto subsequently adopted.

50. OPEN SPACE

An area open to the sky which may be on the same lot with a building. The area may include, along with the natural environmental features, swimming pools, tennis courts, and any other recreational facilities that the RPCC deems permissible. Streets, structures for habitation, and the like shall not be included.

51. OUT LOT

Property shown on a subdivision plat outside of the boundaries of the land which is to be developed and which is to be excluded from the development of the subdivision.

52. OWNER

Any individual, firm, association, syndicate, co-partnership corporation, trust or any other legal entity having legal title to or sufficient proprietary interest in the land sought to be subdivided to commence and maintain proceedings to subdivide the same under these regulations.

53. PAD

A building site prepared by artificial means, including but not limited to grading, excavation or filling, or any combination thereof.

54. PARKING SPACE, OFF-STREET

For the purpose of these regulations, an off-street parking space shall be a surfaced and properly drained area at least ten (10) feet in width and at least twenty (20) feet in length, exclusive of access drives or aisles, ramps, columns, office or work areas, together with properly related access to a public street or alley and maneuvering room, but shall be located totally outside of any street or alley right-of-way.

55. PARKS AND RECREATIONAL CAPITAL IMPROVEMENT FUND

The fund established pursuant to Section 523 of this Resolution.

56. PARKS AND RECREATIONAL FACILITIES

All types of open space, parks, athletic fields, playgrounds, and other facilities for recreational uses of any and all kinds.

57. PERFORMANCE BOND OR SURETY BOND

An agreement by a subdivider or developer with the County for the amount of the estimated construction cost guaranteeing the completion of physical improvements according to plans and specifications as approved by the RPCC within the time prescribed by the sub divider's agreement.

58. PLANNED DEVELOPMENT

Planned Development is:

A. Land under unified control, planned and developed as a whole, as residential, commercial or industrial, or a mixture thereof;

B. In a single development operation or a definitely programmed series of development operations including all lands and buildings, and

C. According to comprehensive and detailed plans which include not only streets, utilities, lots, or building sites and the like, but also site plans and design principles for all buildings as intended to be located, constructed, used and related to each other; and detailed plans for other uses and improvements on the land as related to buildings, and

D. With a program for provision, operation, and maintenance of such areas, improvements, and facilities necessary for common use by some or all of the occupants of the development, but which will not be provided, operated, or maintained at general public expense.

59. PLANNING COMMISSION

The Regional Planning and Coordinating Commission of Greene County, Ohio.

60. PLAT

The map, drawing, or chart on which the developer's plan of subdivision (preliminary) is presented to the RPCC for approval and, after such approval, to the County Recorder (final) for recording.

61. PUBLIC WAY

An alley, avenue, boulevard, bridge, channel, ditch, easement, expressway, freeway, highway, land, parkway, right-of-way, road, sidewalk, street, subway, tunnel, viaduct, walk, or other way in which the general public or public entity have a right, or which are dedicated, whether improved or not.

62. RIGHT-OF-WAY

A strip of land taken or dedicated for use as a public way. In addition to the roadway, it normally incorporates the curbs, lawn strips, sidewalks, lighting, and drainage facilities, and may include special features (required by the topography or treatment) such as grade separation, landscaped areas, viaducts, and bridges.

63. SETBACK LINE

A. Front Setback Line

An imaginary line parallel to the front lot line extending the full width of the lot, representing the distance which all or any part of any structure or building is to be set back from the front lot line. In the event that the front lot line does not fall along the right-of-way line, then the front setback line shall be measured from a line parallel to the twenty-five (25) feet from the centerline of the street. (See Illustration)

B. Side Setback Line

An imaginary line parallel to any side lot line representing the distance with all or any part of any principal building is to be set back from the side lot line. (See Illustration)

C. Rear Setback Line

An imaginary line parallel to any rear lot line representing the distance with all or any part of any principal building is to be set back from the rear lot line. (See Illustration)

64. SEWERS, SANITARY, CENTRAL OR GROUP

A wastewater treatment system approved by the appropriate County, State, and/or Federal agencies which provides a collection network and a central wastewater treatment facility for a single development, community or region.

65. SEWERS, SANITARY ON-SITE

A septic tank or similar installation on an individual lot which utilizes an aerobic or anaerobic bacteriological process or equally satisfactory process for the treatment of sewage and provides for the proper and safe disposal of the effluent, subject to the approval of health and sanitation officials having jurisdiction.

66. SEWER, STORM

A sewer that carries storm water and surface water, street wash and other wash waters, or drainage, but excludes domestic waste water and industrial wastes. Also called a storm drain.

67. SIDEWALKS

That portion of the road right-of-way outside the roadway, which is improved for the use of pedestrian traffic. (See Walkway)

68. SUBDIVIDER (See Developer)

69. SUBDIVISION

A. The division of any parcel of land shown as a unit or as contiguous units on the last preceding tax roll, into two (2) or more parcels, sites, or lots, any one of which is less than five (5) acres for the purpose, whether immediate or future, of transfer of ownership, provided, however, that the division or partition of land into parcels of more than five (5) acres not involving any new streets or easements of access, and the sale or exchange of parcels between adjoining lot owners, where such sale or exchange does not create additional building sites, shall be exempted; or

B. The improvement of one or more parcels of land for residential, commercial, or industrial structures or groups of structures involving the division or allocation of land for the opening, widening, or extension of any street or streets except private streets serving industrial structures; the division or allocation of land as open spaces for common use by owners, occupants, or lease holders, or as easements for the extension and maintenance of public sanitary sewers, water lines, storm drainage or other public features. (See Minor Subdivision)

70. SURVEYOR

A registered land surveyor in the State of Ohio.

71. TERRAIN CLASSIFICATION

Terrain within the entire area of the preliminary plat is classified as level, rolling, hilly, or hillside for street design purposes. The classifications are as follows:

A. "Level" is that land which has a cross slope range of four (4) percent or less.

B. "Rolling" is that land which has a cross slope range of four (4) percent, but, not more than eight (8) percent.

C. "Hilly" is that land which has a cross slope range of more than eight (8) percent, but, not more than fifteen (15) percent.

D. "Hillside" is that land which has a cross slope range of more than fifteen (15) percent.

72. THOROUGHFARE, STREET, OR ROAD

The full width between property lines bounding every public way of whatever nature, with a part thereof to be used for vehicular traffic and designated as follows:

A. Alley: A minor street used primarily for vehicular service access to the back or side of properties abutting on another street.

B. Arterial Street: A general term denoting a highway primarily for through traffic, carrying heavy loads and large volumes of traffic, usually on a continuous route.

C. Collector Street: A thoroughfare, whether within a residential, industrial, commercial, or other type of development, which primarily carries traffic from local streets to arterial streets, including the principal entrance and circulation routes within residential subdivisions.

D. Cul-de-sacs: A local street of relatively short length with one end open to traffic and the other end permanently terminating in a vehicular turnaround.

E. Dead-end Street: A street temporarily having only one outlet for vehicular traffic and intended to be extended or continued in the future.

F. Local Street: A street primarily for providing access to residential, commercial, or other abutting property.

G. Loop Street: A type of street, each end of which terminates at an intersection with the same arterial or collector street and whose principal radius points of the one hundred and eighty (180) degree system of turns are not more than one thousand (1,000) feet from said arterial or collector street, nor normally more than six hundred (600) feet from each other.

H. Marginal Access Street: A local or collector street, parallel and adjacent to an arterial or collector street, providing access to abutting properties and protection from arterial or collector streets. (Also called Frontage Street.)

73. VARIANCE

A variance is a modification of the strict terms of the regulations where such modifications will not be contrary to the public interest and where owing to conditions peculiar to the property and not the result of the action of the applicant, a literal enforcement of the regulations would result in unnecessary hardship.

74. VICINITY MAP

A drawing located on the plat which sets forth by dimensions or other means the relationship of the proposed subdivision or use to other nearby developments or landmarks and community facilities and services within Greene County in order to better locate and orient the area in question.

75. WALKWAY

A dedicated public way, four (4) feet or more in width, for pedestrian use only, whether along the side of a road or not.

76. WATER, CENTRAL OR GROUP

A water supply system approved by the appropriate County, State, and/or Federal agencies which provides a water supply network and central water supply facilities for a single development, community, or region.

77. WATER SYSTEM ON-SITE

A well or other similar installation on an individual lot which provides a water supply to any structures or uses upon the lot, subject to the approval of health and sanitation officials having jurisdictions.

78. WATERSHED

The drainage basin in which the subdivision drains or that land whose drainage is affected by the subdivision.

79. YARD

An open space other than a court on the same lot with a principal building and unobstructed by buildings or structures from ground to sky except by trees or shrubbery or as otherwise provided herein. The minimum depth of a yard shall be determined by the setback lines as defined in this Resolution. No part of a yard provided for any building or structure shall be included as a part of any yard required for any other building or structure unless specifically permitted herein.

80. YARD, FRONT

An open space extending the full width of the lot between a building,. or structure and the front lot line of a street unoccupied and unobstructed from the ground upward except as hereinafter specified. Minimum depth shall be measured front lot line, existing right-of-way line established on the Official Thoroughfare Plan or by any other method specified elsewhere in this Resolution, as appropriate. (See Illustration)

81. YARD, REAR

An open space extending the full width of the lot between a building or structure and the rear lot line, unoccupied and unobstructed from the ground upward except as hereinafter specified. (See Illustration)

82. YARD, SIDE

An open space extending from the front yard to the rear yard between a building or structure and the nearest side lot line unoccupied and unobstructed from the ground upward except as hereinafter specified. (See Illustration)

ARTICLE 3

THE PRELIMINARY DESIGN PLAN

SECTION 301 PRE-CONFERENCE

Prior to the preparation of the preliminary design plan the subdivider should seek the assistance of the RPCC of Greene County, Ohio, staff in order that he may become familiar with the subdivision requirements of Greene County. The intent of this meeting is also to discuss early and informally the purpose and effect of the subdivision regulations and criteria and standards contained therein; and to familiarize the developer with

the Comprehensive Plan, the Thoroughfare Plan, Master Plan for Parks and Open Space, Runoff Control and Sediment Abatement Resolution, and the sewage and water system for Greene County. This meeting does not involve any formal application, fee, or filing of a plat with the RPCC of Greene County, Ohio.

SECTION 302 THE PRELIMINARY DESIGN PLAN OPTION

In order that the developer may better ascertain whether the proposed basic design plan of the proposed subdivision may be acceptable and comply with the applicable subdivision rules and regulations, the developer may submit a preliminary design plan for review and tentative approval prior to the formulation and submittal of detailed construction drawings. The preliminary design plan option is conducted for the developer's benefit and at his option. The preliminary design plan does not constitute a formal subdivision review pursuant to Section 711.10 of the Ohio Revised Code. With the submission of the preliminary design plan for review, the applicant waives any rights to an approval under Section 711.10 until such time as application is made for final subdivision plan review and is submitted to the RPCC for review and approval, as detailed in Article 4 of these regulations.

SECTION 303 SUBMISSION TO OHIO DEPARTMENT OF TRANSPORTATION (ODOT)

Before any design plan is approved affecting any land within three hundred (300) feet of the centerline of a proposed new highway or a highway for which changes are proposed as described in the certification to local officials by Ohio Department of Transportation or any land within a radius of five hundred (500) feet from the point of intersection of said centerline with any public road or highway, the RPCC of Greene County, Ohio, shall give notice, by registered or certified mail to the Director of Ohio Department of Transportation. The RPCC shall not approve the plat for one hundred twenty (120) days from the date the notice is received by ODOT or until a response is received from the Director, whichever is less. If ODOT notifies the RPCC that is shall proceed to acquire the land needed, then the RPCC shall refuse to approve the plat. If the ODOT notifies the RPCC that acquisition at this time is not in the public interest or upon expiration of the one hundred and twenty (120) day period or any extension thereof agreed upon by the ODOT and the property owner, The RPCC shall, if the plat is in conformance with all provisions of these regulations, approve the plat.

SECTION 304 APPLICATION FOR PRELIMINARY DESIGN PLAN APPROVAL

An application on approved forms for the approval of the preliminary design plan, together with copies, as determined by the RPCC of the preliminary design plan and the supplementary information shall be submitted to the RPCC. The subdivider shall prepare and submit eighteen (18) copies of the preliminary design plan at least twenty (20) working days prior to the meeting at which it is to be considered, as required by the RPCC according to the standards and other provisions of these regulations.

SECTION 305 PRELIMINARY DESIGN PLAN FORM

The preliminary design plan shall be drawn at a scale not less than one hundred (100) feet to the inch. The preliminary design plan shall be clearly and legibly drawn. The size shall be in multiples of 6" not to exceed 36" x 48".

SECTION 306 PRELIMINARY DESIGN PLAN CONTENTS

The preliminary design plan shall contain the following information: (all of the following shall be required for favorable consideration)

A. Proposed name of the subdivision, which shall not duplicate or closely approximate the name of any other subdivision in the County.

B. Location by section, range, town, and township or Virginia Military Survey Number.

C. Names, addresses and phone number of the owner, subdivider and professional engineer and registered surveyor who prepared the plan, and appropriate registration numbers and seals.

D. Date of survey, which shall be the date of topographic, aerial or any other type of survey that is the basis for the preliminary design plan.

E. Scale of the plat, north point.

F. Boundaries of the subdivision and its acreage.

G. Names of adjacent subdivisions, owners of adjoining parcels of unsubdivided land, and the location of their boundary lines.

H. Locations, widths, and names of existing streets, railroad right-of-way, easements, parks, permanent buildings, and corporation and township lines; location of wooded areas and other significant topographic and natural features within and adjacent to the plat for a minimum of five hundred (500) feet whose presence and accurate location need to be known in order for decisions regarding the subdivision to be made. Any wet or

flood prone areas shall be delineated. Lots shall not be divided by township, corporate, or county boundary lines.

I. Zoning classification of the tract and adjoining properties and a description of proposed zoning changes, if any.

J. Existing contours at two (2) foot intervals for predominant ground slopes within the subdivision between level and ten (10) percent grade and five (5) foot intervals for predominate ground slopes within the subdivision over ten (10) percent grade. Contours shall be mean sea level datum and nearest bench mark shall be specified and described. The method of determining topographic contours or the source of topographic contours., if done by others, and the date of the topographic survey, shall be noted.

K. Existing sanitary sewers, storm sewers, water lines, culverts other underground structures and power transmission poles and lines, within and adjacent to the tract. Where existing installations will become undersized due to proposed development, revised size shall be noted.

L. Location, names, and widths of proposed streets and easements.

M. Building setback lines with dimensions, as prescribed by appropriate zoning resolution.

N. Location and dimensions of all existing utilities, sanitary sewer lines, water lines, and storm sewer lines and a general layout of proposed utilities, sanitary sewer lines, water lines storm sewer lines, showing their connection with the existing system.

O. All thoroughfares as shown on the Official Thoroughfare Plan wherever they traverse the plat.

P. Layout, numbers, and scaled dimensions of each lot. When a lot is indicated on a curved street or when side lot lines are not at ninety (90) degree angles, the width at the property line shall be shown.

Q. Parcels of land in acres to be reserved for public use or to be reserved by covenant for residents of the subdivision.

R. A vicinity map at a scale of not less than one thousand (1,000) feet to the inch shall be shown on, or accompany, the preliminary design plan. This map shall show all existing subdivisions, roads, and tract lines and the nearest existing thoroughfares. It shall also show the most advantageous connections between the roads in the proposed subdivision and those of the neighboring areas.

SECTION 307 SUPPLEMENTARY INFORMATION

The following information shall be supplied in addition to the requirements in Section 306.

A. Statement of proposed use of lots, giving type and number of dwelling units and type of business or industry.

B. Locations and approximate dimensions of all existing buildings.

C. For commercial and industrial development, the location, dimensions, and approximate grade of proposed parking and loading areas, alleys, pedestrian walks, streets and the points of vehicular ingress and egress to the development.

D. Description of proposed convenants and restrictions.

E. In a letter accompanying the request for approval of the preliminary design plan, the subdivider shall state the type of wastewater treatment system and potable water system he proposes to use.

F. The preliminary design plans shall be revised to "as built" conditions with the completion of each section and resubmitted with the request for approval of each additional section with previous sections boldly outlined and noted. (8 copies)

G. The proposed subdivision shall be located on a copy of the USGS map and all drainage areas influencing or influenced by the subdivision shall be outlined. The drainage area over which the proposed subdivision is located shall be mapped according to the requirements contained within these regulations as well as those mandated by the Greene County Runoff Control and Sediment Abatement Resolution.

SECTION 308 FILING

The preliminary design plan shall be considered officially filed after it is examined by the Executive Director of the RPCC of Greene County, Ohio, or his designee and is found to be in full compliance with the formal provisions of these regulations. The subdivider shall be notified by mail within five (5) working days as to the date of official filing and the meeting at which the plat shall be reviewed.

SECTION 309 APPROVAL OF PRELIMINARY DESIGN PLAN

The RPCC of Greene County, Ohio shall forward copies of the preliminary design plan to such officials and agencies as may be necessary for the purpose of study and recommendation. These shall include but are not limited to the Township Trustees, (registered or certified mail, or hand delivered, receiving a signed receipt) County Engineer, County Sanitary Engineer, and the Greene County Health Department. After receipt of reports from such officials and agencies, the RPCC shall determine whether the preliminary design plan shall be approved, approved with modifications, or disapproved. If disapproved the reasons for such disapproval shall be stated in writing. The RPCC shall act on the preliminary design plan within thirty (30) days after, filing unless such time is extended by agreement with the subdivider. Approval of the preliminary design plan shall be conditional upon compliance with all other applicable resolutions and regulations of the County.

SECTION 310 APPROVAL PERIOD

The approval of the preliminary design plan shall be effective for a maximum of twelve (12) months unless the first section has received final approval from the RPCC and recorded in the office of the Greene County Recorder.

SECTION 311 PUBLIC HEARING

The RPCC, on its own initiative prior to acting on a preliminary design plan of a subdivision, may hold a public hearing thereon at such time and upon such notice as the RPCC may designate.

ARTICLE 4

THE FINAL PLAN

SECTION 401 FINAL PLAT REQUIRED

The subdivider, shall submit a final plat of the subdivision and drawings and specifications of the improvements required therein. If a preliminary design plan has been previously approved the final plat shall have incorporated all changes in the preliminary plan required by the RPCC of Greene County, Ohio. Otherwise it shall conform to the preliminary design plan, and it may constitute only that portion of the approved preliminary design plan which the subdivider proposes to record and develop at the time. The final plat and the supplementary information shall be prepared by a registered professional engineer or surveyor as appropriate. Should the applicant elect to submit a final plat without having a preliminary design plan previously approved only that section of the preliminary design plan covered by the final plat shall be considered. Should the developer submit a final plat without having previously received a preliminary design plan approval, his final plan submission must include all the information enumerated under Section 303, 305, 306 and 307 of these regulations as well as the following.

SECTION 402 APPLICATION FOR APPROVAL OF FINAL PLAT

An application for approval for the final plat shall be submitted on forms provided by the RPCC at least twenty (20) working days prior to the meeting at which it is to be considered together with:

A. Eighteen (18) copies of the final plat. The original tracing, and one (1) reproducible tracing (to be retained by the RPCC of Greene County) which shall be made of mylar or photactive cloth, shall be filed within five (5) working days after final plat approval.

B. Ten (10) copies of profiles of streets, sanitary sewers, storm sewers, water lines, curbs and gutters and all other construction drawings and the estimated construction costs related to the improvements to be constructed in the subdivision. Ten (10) copies of cross-sections of the above shall be submitted when required.

C. The final plat drawings and specifications of improvements shall be a set of construction drawings, general block grading plans, utility plans prepared by a registered professional engineer licensed to practice in the State of Ohio and certified by same.

SECTION 403 REGULATIONS GOVERNING IMPROVEMENTS

The following rules apply to subdivision improvements and performance guarantees:

A. The plans shall indicate typical sections, plans and profile view, construction details and estimates of quantities. All typical sections and major engineering details to be used on any particular street shall be approved in advance by the County Engineer before completion of the plans. (See Article 8, Section 804).

B. Prior to the granting of approval of the final plat, the subdivider shall have installed the minimum required improvements, or shall have furnished a surety certified check, surety bond or irrevocable letter of credit in the amount of the estimated construction cost of the ultimate installation.

C. Before the surety is accepted, it shall be approve by the proper administrative officials.

D. The improvements shall be constructed within a reasonable time as determined by the County Engineer, but not to exceed two (2) years.

E. All required subdivision improvements shall be maintained in a satisfactory condition by the subdivider during any interim period between this construction and final approval and acceptance of the subdivision by the County.

F. The County Engineer and/or Sanitary Engineer may recommend reductions of surety consistent with Article 8 upon the completion of a portion of the subdivision improvements prior to final acceptance of the improvements by Greene County.

SECTION 404 FINAL PLAT FORM

The final plat shall be legibly drawn in waterproof ink on tracing cloth or other material of equal permanence. It shall be drawn at a scale not less than one hundred (100) feet to the inch, and shall be one or more sheets, 14 x 20 inches in size. If more than one sheet is needed, each sheet shall be numbered and the relation of one sheet to another clearly shown.

SECTION 405 FINAL PLAT CONTENTS

The final plat shall contain the following information:

A. Name of the subdivision, location by section, range and township or by Virginia Military Survey Number; date, north point, scale, and acreage to hundredths of acre and deed book and page reference.

B. Name and address of the subdividers and registered surveyor who prepared the plat and appropriate registration number and seal.

C. Plat boundaries, based on accurate traverse, with angular and lineal dimensions. The basis of the bearings shall be stated. All dimensions, both lineal and angular, shall correspond with a field survey employing such techniques that the most remote point encompassed by the survey shall register in both distance and azimuth to an error ratio or one (1) part in 10,000.

D. Bearings and distances to nearest established street lines or other recognized permanent monuments.

E. Exact location, right-of-way, and names of all streets within and adjoining the plat, and building setback lines.

F. Radii, internal angles, points of curvature, tangent bearings, lengths of arcs, of all applicable streets within the plat area.

G. All easements and right-of-way provided for public services or utilities and shall be described as sanitary sewer, storm, drainage, etc.

H. All lot numbers and lines with accurate dimensions in feet and hundredths or decimal of meters based on the equation: one (1) survey foot equals 0.30480061 meter.

I. Accurate location and description of all monuments and pins.

J. Accurate outlines of areas to be dedicated or reserved for public use, or any area to be reserved for the common use of all property owners. The use and accurate boundary locations shall be shown for each parcel of land to be dedicated.

K. Any restrictions and covenants shall be shown on the final plat.

L. Certification by a registered surveyor to the effect that the plat represents a survey made by him and that the monuments shown thereon exists as located and that all dimensional details are correct.

M. Acknowledgment of the owner or owners to the plat and restrictions, including dedications to public use of all streets, alleys, parks, sanitary sewer and water lines, storm sewers, drainage easements, gas lines, or other open spaces shown thereon and the granting of the required easements, as shall be indicated by the following statement: "Easements shown on this plat are for the construction, operation, maintenance, repair, replacement, or removal of water lines, gas lines, storm sewer drainage, sanitary sewer, electric, telephone or other utilities or services, and for the express privilege of removing any and all trees or other obstructions to the free use of said utilities and for providing of ingress and egress to the property for said purpose, and are to be maintained as such forever."

N. The names of record of all abutting tracts with their deed book and page reference and the plat book reference of all abutting plats.

O. Any section lines, corporation limits, township and county lines shall be accurately documented and located on the plat and their names lettered thereon.

P. Every plat shall be superimposed on a survey of the lands of the dedicators from which such plat is drawn, and shall contain an accurate background drawing of any metes-and-bounds descriptions of the lands of the dedicators from which such plat is drawn.

Q. All subdivisions not served by sanitary sewer must include in the protective covenants and restrictions of the record plat the following:

A specific area has been designated for an on-site sewage disposal system for each lot in this subdivision by the Greene County Health Department. For information concerning this specific location and/or other limitations contact the Greene County Health Department.

SECTION 406 SUPPLEMENTARY INFORMATION

The following information shall be supplied in addition to the requirements in Section 405.

A. If a zoning change is involved, certification from the appropriate Township Zoning Inspector shall be required indicating that the change has been approved and is in effect, and that the proposed subdivision is in accord with the requirements of the local zoning resolution.

B. Certification shall be required showing that all required improvements have been either installed or approved by the proper officials or agencies, or that a bond or other surety has been furnished assuring installation and initial maintenance of the required improvements.

C. Every submission shall be reviewed and conform to the standards set forth in the Runoff Control Sediment Abatement Resolution as adopted by the Board of Greene County Commissioners, effective April 3, 1981. Each submission must be accompanied by the applicants site development planning information for the proposed development. No work may begin, nor, shall the record plan be recorded prior to the RPCC approval of the storm runoff and soil erosion control plan for the site.

SECTION 407 FILING

The final plat shall be filed with the RPCC not later than twelve (12) months after the date of approval of the preliminary design plan; otherwise it will be considered void unless an extension is requested by the developer and granted in writing by the RPCC.

The final plat shall be filed at least twenty (20) working days prior to the meeting at which it is to be considered. The Director or his designee shall notify the subdivider or developer by mail of the date the final plat has been considered officially filed.

SECTION 408 APPROVAL OF FINAL PLAT

A. Before any final plat is approved affecting any land within three hundred (300) feet of the centerline of a proposed new highway or a highway for which changes are proposed as described in the certification of local officials by Ohio Department of Transportation or any land within a radius of five hundred (500) feet from the point of intersection of said centerline with any public road or highway, the RPCC of Green County, Ohio shall give notice by registered or certified mail to the Director of Ohio Department of Transportation. The RPCC shall not approve the plat for one hundred and twenty (120) days for the date the notice is received by Ohio Department of Transpiration or until a response is received from the Director, whichever is less. If ODOT notifies the RPCC that acquisition at this time is not in the public interest or upon expiration of the one hundred and twenty (12) day period or any extension thereof agreed upon by the ODOT and the property owner, the RPCC shall, if the plat is in conformance with all provisions of these regulations, approve the plat.

B. The RPCC shall approve or disapprove the final plat within thirty (30) days after it has been officially filed. Failure of the RPCC to act upon the final plat within such time shall be deemed as approval of the plat. The approval of the RPCC or the refusal to approve shall be endorsed on the plat. If the plat is disapproved, the grounds for disapproval shall be stated in the records of the RPCC, and a copy shall be forward to the subdivider.

SECTION 409 TRANSMITTAL OF COPIES AND RECORDING

When the final plat has been approved by the RPCC, the original tracing and three signed prints shall be returned to the subdivider. He shall record the final plan in the office of the Recorder of Greene County, Ohio within sixty (60) days after the date of approval; otherwise the plan shall be considered void.

SECTION 410 MINOR SUBDIVISION (LOT SPLITS)

Approval without a plat of a minor subdivision may be granted by the RPCC if the proposed division of a parcel of land meets all of the following conditions:

A. The proposed subdivision is located along an existing public road and involves no opening, widening, or extension of any street or road or public utilities.

B. The proposed subdivision is not contrary to applicable subdivision or zoning regulations.

C. The proposed subdivision is approved by the Greene County Health Department; Ohio Environmental Protection Agency or the Greene County Sanitary Department which ever is applicable.

D. The property has been surveyed and a survey sheet in the form as provided for under Section 411 and legal description of the property is submitted with the application.

E. Minor lot splits on an easement may be approved as a variance to these regulations subject to the following:

1. A specific hardship is proven to exist that does not permit the strict compliance with these regulations; and

2. That no more than three such lot splits shall be approved on an easement out of the original tract; and

3. That the access easement shall be no less than fifty (50) feet wide and no new structures shall be built thereon; and

4. That the township Board of Zoning Appeals has first granted a variance to allow the above.

F. If approval is given under these provisions, the authorized representative of the RPCC shall within seven (7) working days after submission, approve such proposed division and, upon presentation of a conveyance for said parcel and property prepared survey sheet of property, shall stamp "Approved by the Regional Planning and Coordinating Commission of Greene Count, No Plat Required," and the authorized representative of the RPCC shall sign the conveyance.

SECTION 411 GREENE COUNTY REGULATIONS FOR THE TRANSFER OF LAND WITHOUT A SUBDIVISION

A. Prepare survey sheet on official form secured from the Greene County Engineer.

B. Registration number, seal, and signature of qualified surveyor.

C. Iron pins shall be placed on all corners, and identified by circles.

D. Show scale and north point.

E. Show general location by vicinity sketch.

F. Name of grantor and grantee.

G. Description by section, town, range, or Military Survey and township.

H. Certification of zoning classification by the appropriate township zoning inspector.

SECTION 412 THE TRANSFER OF MORE THAN FIVE ACRES

A. Any tract that is proposed to be transferred up to ten (10) acres shall meet the requirement as stated under Section 411.

B. Proposed tract shall be reviewed by the Executive Director or his designee. If he is satisfied that such proposed division is not contrary to applicable platting, subdividing, health department or zoning regulations, he shall sign or stamp same, "approved".

SECTION 413 BUILDING PERMITS

No building permit for the construction of a dwelling or building shall be issued by the County Building Inspector unless the final subdivision plat where such dwelling is to be located has been approved by the RPCC.

SECTION 414 ADMINISTRATIVE APPROVAL OF REPLATS

The Executive Director is granted authority to process and approve, on behalf of the RPCC, replats where no additional lots are created subject to the following:

A. Administrative approval shall only be granted for recombinations of land and consolidation of lots.

B. In no case shall administrative approval be given where no additional lot would be created.

C. Review and approval by appropriate agencies shall be conducted and the proposed replat shall be in conformance with all other appropriate sections of this regulation.

D. The President and the Executive Director shall sign the replat on behalf of the RPCC.

E. The replat shall be submitted to the Greene County Board of Commissioners with a recommendation to "accept and recommend that the same be recorded".

ARTICLE 5

SUBDIVISION DESIGN STANDARDS

SECTION 501 GENERAL

The regulations in Section 502 through 523, inclusive, shall control the manner in which streets, lots, and other elements of a subdivision are arranged on the land. These design controls shall help insure convenient and safe streets, creation of usable lots, provisions of space of public purposes. The planning of attractive and functional neighborhoods shall be promoted, minimizing the undesirable features of unplanned, haphazard growth.

The RPCC has the responsibility for reviewing the design of each future subdivision early in its design development. The Commission shall insure that all of the requirements of Section 502 through 523, inclusive, are met.

SECTION 502 CONFORMITY TO DEVELOPMENT PLANS AND ZONING

The arrangement, character, width, and location of all thoroughfares or extensions thereof shall conform with the County's Major Thoroughfare Plan. Thoroughfares not contained in the aforementioned plan shall conform to the recommendation of the RPCC based upon the design standards set forth in Section 503 to 515, inclusive. In addition, no final plat of land within the areas in which an existing zoning resolution is in effect shall be approved unless it conforms with such resolution.

A. At the pre-preliminary discussion, proposed streets shall be designated as local, collector, or arterial. Both physical and geometric design shall be based upon these designations in adapting the proposed streets to the existing terrain and soils.

B. The standards of the American Association of the State Highway and Transportation Officials (AASHTO), as published in A Policy on Geometric Design of Rural Highways, 1984; A Policy on Design Standards for Stopping Sight Distances, 1971; and subsequent publications modifying those standards by AASHTO in effect at the time of final plat submission, shall govern the design of subdivision streets and abutting county and township roads. The "Desirable Sight Distance Values" will govern in all but the most unusual instances, and any lesser values must be approved by the County Engineer before the preliminary design plan is approved.

SECTION 503 SUITABILITY OF LAND

If the RPCC finds that land proposed to be subdivided is unsuitable for subdivision development due to flooding, poor drainage, topography, inadequate water supply, and/or inadequate wastewater treatment facilities; schools, transportation facilities, and other such conditions which may endanger health, life, or property; and, if from investigations conducted by the public agencies concerned, it is determined that in the best interest of the public the land should not be developed for the subdivision proposed, the RPCC shall not approve the land for purpose unless adequate methods are advanced by the subdivider for solving the problems that will be created by the development of the land.

SECTION 504 STREET DESIGN

The arrangement, character, width, grade construction, and location of all streets shall conform to the Major Thoroughfare Plan for Greene County, or subsequent amendments thereto in effect at the time of final plat subdivision, and shall be considered in their relation to existing and planned streets, topographical conditions and public convenience and safety; and in their appropriate relation to the proposed uses of the land to be served by such streets. The street pattern shall discourage through traffic in the interior of a subdivision. The subdivider shall provide within the boundaries of the subdivision plat the necessary right-of-way for widening, continuance, or alignment such streets in conformity with the Official Thoroughfare Plan.

SECTION 505 STREET NAMES

Names of new streets shall not duplicate those of existing or platted streets, irrespective of the use of the suffix street, avenue, circle, boulevard, drive, etc., and shall be displayed at each street intersection with street signs of the type established by Greene County. When a new street is a direct extension of an existing street, the name shall remain the same. Color shall conform to township requirements. All signs shall be double-faced, and shall be so erected as to be legible from any direction and the location of the aforementioned signs shall be designated in the street plan and profile. Street names shall be subject to the approval of the RPCC of Greene County.

SECTION 506 STREET DESIGN STANDARDS FOR CUL-DE-SACS AND LOOP TYPE LOCAL STREETS

The design and improvement standards contained herein are minimums for cul-de-sacs and loop type local streets in residential subdivision. All such streets shall be designed and constructed in accordance with standards as specified in Table 1. Cul-de-sacs shall be required wherever a street is intended to be permanently dead ended.

SECTION 507 STREET DESIGN STANDARDS FOR ALL LOCAL STREETS EXCEPT CUL-DE-SACS AND LOOP TYPE STREETS

The design and improvement standards contained herein are minimums for all local type streets, except cul-de-sacs and loop type streets, in residential subdivisions. All such streets shall be designed and constructed in accordance with the standards as specified in Table 2.

SECTION 508 COLLECTOR STREET DESIGN STANDARDS

The design and improvement standards contained herein are minimums for all collector streets. All such streets shall be designed and constructed in accordance with the standards as specified in Table 3.

SECTION 509 OFFICIAL THOROUGHFARE DESIGN STANDARDS

A. The design standards of and the required improvements to arterial streets and roads as shown on the Official Thoroughfare Plan are contained in Table 4. Construction design criteria of these streets are not specified in these regulations but are to be determined by the County Engineer when and if such a street abuts or crosses the proposed subdivision. Certain improvements may be waived upon recommendation of the County Engineer after review and approval by the RPCC. In all cases right-of-way dedications shall be required.

B. The subdivider shall be responsible for all required improvements including the required pavement width measured back to back of curb on an undivided street. On a divided street, the subdivider shall be responsible for the sidewalk, if required, one curb, one-half (1/2) of the require pavement measured to back of curb and storm drainage.

C. When developing along one side of an existing street or roadway which is included in the Official Thoroughfare Plan, the subdivider shall be responsible for one curb, pavement widening to thoroughfare width of his side, all necessary adjustments to existing pavement, and storm drainage for the street in accordance with the agreement with the County Engineer. Where sight distances or other engineering requirements make in imperative, the pavement adjustment responsibility shall include the replacement of up to the entire existing pavement, also in accordance with an agreement with the County Engineer.

D. Where marginal access streets are used to provide access to existing or proposed major arterials (82-120 ROW widths) improvements on those thoroughfares may be waived.

SECTION 510 HORIZONTAL ALIGNMENT

When there is an angle of deflection of more than ten (10) degrees between two (2) centerline tangent sections of street, a curve of adequate radius shall connect them. (See Section 506 to 509, inclusive.) Between reverse curves, a minimum tangent shall be introduced as indicated in Tables 1-3.

SECTION 511 VERTICAL ALIGNMENT

A. All changes in grades shall be connected by vertical curves of a minimum length in feet equal to twenty (20) times the algebraic difference in the rate of change of grade expressed in feet per hundred feet. Longer vertical curves shall be used when needed for sight distances as determined by the County Engineer.

B. No street grade shall be less than 0.4 percent and on stop streets grade shall not exceed 2 percent positive or 3 percent negative within one hundred (100) feet of an intersection unless otherwise approved by the County Engineer. The positive is considered going up from the intersection and the negative is going down from the intersection.

C. Whenever the developer changes the grade of an existing street outside the limits of the development and the grade change requires adjustment to meet existing improvements (streets, driveways, walks, etc.) such adjustments as are required will be the responsibility of the developer in accordance with an agreement with the County Engineer.

SECTION 512 INTERSECTION DESIGN STANDARDS

A. The design and improvement standards for intersections are minimums for all street intersections in subdivisions. All such intersections shall be designed and constructed in accordance with the standards as specified in Table 5.

B. Multiple intersections involving junctions or more than two (2) streets shall be avoided.

C. Four-way intersections of local streets should be avoided and three-way or T-intersections should be encouraged whenever possible.

D. Individual grades for each curb shall be provided on a stop street when the grade on the through street exceeds two (2) percent.

E. Low points which would result in water ponding or poor visibility shall not be permitted.

SECTION 513 SPECIAL STREET TYPES

The following requirements shall apply to special types:

A. Permanent dead-end streets shall not be permitted. Temporary dead-end streets shall be permitted only as part of a continuing street plan. Where a street is temporarily dead-ended at a property line, and its length is in excess of one lot, a curbed, paved temporary turnaround may be required with a minimum radius of forty (40) feet. Additional temporary easements will be provided where necessary.

B. Dedication of new half-street shall not be permitted. Where a dedicated or platted half-street exists adjacent to the tract being subdivided, the other half shall be platted.

C. Where a subdivision abuts or contains an existing or proposed arterial street (80-120 ROW), the RPCC may require marginal access streets, reverse frontage with screen planting contained in a non-access reservation along the rear property line or other such treatment as may be necessary for adequate protection of residential properties and to afford separation of through and local traffic. There shall be no direct vehicular access from residential lots to such arterial streets or highways.

D. Alleys shall not be approved in residential subdivisions except where justified by extreme conditions. Alleys may be required in commercial or industrial districts if other provisions cannot be made for adequate service access. The minimum widths for alleys shall be twenty (20) feet for the right-of-way and eighteen (18) feet for the pavement width.

SECTION 514 STREETS FOR COMMERCIAL SUBDIVISIONS

Streets serving business developments and accessory parking areas shall be planned to connect with arterial streets so as not to generate traffic on local streets. The intersections of driveways from parking areas with arterial or collector streets shall be located so as to cause the least possible interference with traffic movement on the streets and shall be located not less than one hundred (100) feet from the intersection of an arterial or collector street and shall be spaced not less than two hundred (200) feet from each other. The RPCC may require marginal access streets to provide maximum safety and convenience. Design and construction standards shall be approved by the County Engineer.

SECTION 515 STREETS FOR INDUSTRIAL SUBDIVISIONS

Collector streets for industrial subdivisions shall be planned to serve industrial areas exclusively and shall connect with arterial streets so that no industrial traffic will be directed into any residential street. The intersections of service streets from parking areas with arterial or collector streets shall not be less than one hundred (100) feet from the intersection of the arterial or collector street with any other street. Location of curb cuts shall be approved by the RPCC. Design and construction standards shall be approved by the County Engineer.

SECTION 516 SIDEWALKS

A. Sidewalks shall be required in all subdivisions. Where the average front lot line is 100 feet or less, sidewalks shall be required on both sides of the street. Where the average front lot line is greater than 100 feet, sidewalks may only be required on one side of the street. Where the average front lot line is greater than 150 feet (Estates lots), sidewalks shall not be require.

B. Public sidewalks shall be required for all commercial lots.

C. Public sidewalks may be required for industrial lots, subject to the approval of the RPCC.

SECTION 571 BLOCKS

The following regulations shall govern the design and layout of blocks:

A. The arrangement of blocks shall be such as to conform to the street planning criteria set forth in Section 504 to 516, inclusive, and shall be arranged to accommodate lots and buildings sites of the size and character required for the district as set forth in these subdivision regulations or the zoning resolution and to provide for the required community facilities.

B. Irregularly shaped blocks, these intended for cul-de-sacs or loop streets, and those containing interior parks or playgrounds, may be approved by the RPCC if properly designed and located and if the maintenance of interior public spaces is covered by agreements.

C. No block shall be longer than fifteen hundred (1,500) feet and the block width shall accommodate lots and building sites of the size and character required for the district as set forth in these subdivision regulations or the zoning resolution and to provide for the required community facilities.

D. Where blocks are over nine hundred (900) feet in length a crosswalk easement not less than ten (10) feet in width at or near the halfway point may be required if necessary to provide proper access to schools, recreational areas, shopping centers and other facilities.

SECTION 518 LOTS

The following regulations shall govern the design and layout of lots:

A. The lot arrangement and design shall be such that all lots will provide satisfactory building sites, properly related to topography and the character of surrounding development.

B. All lots shall conform to or exceed the requirements of the zoning district requirements for the district in which they are located and the use for which they are intended.

C. Each lot shall front on an improved dedicated street. Where soil conditions are of such nature that proper operations of wells and septic tanks may be impaired, the RPCC of Greene County, in co-operation with the County Health Department may increase the size of any or all lots in the subdivision.

D. Where not stipulated within an appropriate zoning resolution, minimum lot size and frontage shall be a specified in the following table:

Type of Development	With Public Sewer and Water	With Public Sewer and Water	Without Public Sewer and Water
Single Family	60' Front lot line 7,500 Sq. Ft.	80' Front lot line 15,000 Sq. Ft.	100' Front lot line 43,560 Sq. Ft.
Two Family	70' Front lot line 9,500 Sq. Ft.	100' Front lot line 20,000 Sq. Ft.	125' Front lot line 43,560 Sq. Ft.
Multiple Family	90' Front lot line 10,500 Sq. Ft.*	NOT PERMITTED	NOT PERMITTED

*Add 3,000 square feet for each unit over three.

E. All side lot lines shall be at right angles to street lines and radial to curved street lines except where the RPCC determines that a variation to this rule would provide a better layout.

F. Lots with double frontage shall be avoided except where the RPCC determines that it is essential to provide separation of residential development from arterial streets.

G. The maximum depth of a lot shall not be greater than three times the width of the lot. Lots which contain an area of five acres or more shall not be greater than four (4) times the width of the lot.

H. Additional lot depth may be required where a residential lot in a subdivision backs up to a railroad right-of-way, a high pressure gasoline or gas line, open drainage ditches and arterial streets, an industrial area or other existing land use which may have a detrimental effect on the residential use of the property, and where not street is provided at the rear of such lot. Where a residential lot has its side lot line adjacent to any of the aforementioned, an appropriate additional width may also be require.

SECTION 519 EASEMENTS

A. Utility Easements: Public utility easements at least ten (10) feet in total width may be required along the rear and sides of lots where needed for the accommodation of a public utilities, drainage or any combination of the foregoing. Sanitary sewer and water line easements shall have a minimum total width of twenty (20) feet. Where deemed necessary by the RPCC, an additional easement width shall be required. Extra street easements for backslopes may be required by the RPCC where necessary.

B. Watercourses: The subdivider shall provide easements for storm drainage purposes which conform substantially with the lines of any natural watercourses, channels, streams, or creeks which traverse the subdivision or for any new channel which is established to substitute for a natural watercourse, channel, stream or creek. Such easements shall be of a width which will provide for the maintenance needs of the channel and incidental structures as determined by the RPCC.

SECTION 520 PHYSICAL CONSIDERATIONS

Natural Land Uses: Subdivisions should be planned to take advantage of the topography of the land, to economize in the construction of drainage facilities, to reduce the amount of danger, to minimize destruction of trees and topsoil and to preserve such natural features as watercourses, unusual rock formations, large trees, sites for historical significance and other assets which, if preserved, will add attractiveness and value to the subdivision and the community.

SECTION 521 FLOOD PLAIN

A. As a safety measure for the protection of health and welfare the people of Greene County, Ohio, the RPCC shall not approve any subdivision located in areas subject to periodic flooding. If the subdivision is located in said area or an area having other physical impairment, the RPCC may approve the subdivision provided the developer's plans meet the requirements of the Federal Emergency Management Administration and Section 601 of the Greene County, Ohio Building Code and he agrees to perform such improvements as will render the area substantially safe for residential, commercial or industrial uses; and further, provide that in lieu of the improvements, the subdivider shall furnish a surety bond or a surety certified check covering the cost of the required improvements. In no case shall a subdivision in a flood plain be approved where the total development will raise the 100 year flood elevation more than one foot, or where the first floor elevation of building will be below the 100 year flood elevation plus two feet.

B. Stream Easement: If a stream flows through, or adjacent to the proposed subdivision, the plat shall provide for a storm water easement along the stream for a floodway of at least ten (10) feet. For the smaller streams, the plat shall provide for channel improvement to enable them to carry all reasonable floods within banks. The floodway easement shall be wide enough to provide for future enlargement to the stream channels as adjacent areas become more highly developed and runoff rates are increased.

C. Streets: Approval shall not be given for streets within a subdivision which would be subject to flooding. All streets must be located at elevations which will make them flood-free in order that no portion of the subdivision would become isolated by floods.

SECTION 522 PUBLIC OWNERSHIP OF STORM DRAINAGE CHANNELS

A storm drainage channel requiring a capacity greater than that accommodated by a seventy-two (72) inch diameter pipe shall remain as an open channel. Where conditions justify, exceptions may be made by the County Engineer. The cross section and profile of said channel and its banks shall be determined by the County Engineer and Greene County Soil and Water Conservation District. After inspection, open channel banks and a ten (10) foot berm shall be seeded and mulched at the end of each construction day according to specifications in the latest revision of Water Management and Sediment Control for Urbanizing Areas, Soil Conservation Service. Upon completion of the construction of said drainage channel, the channel, its banks, and an area of adequate width to permit proper maintenance of the channel shall be dedicated to Greene County and maintained by Greene County Engineer as provided for in Chapter 6137 and others of the Ohio Revised Code.

SECTION 523 DEDICATION OF PARKS AND OPEN SPACE

A. Findings and Statement of Policy

1. Parkland Standard. It is found and determined that the public health, safety and welfare require that at least ten (10) acres of property for each 1,000 persons residing within the planned jurisdiction, as defined in this resolution, be devoted to and developed for park and recreational purposes, and the same is hereby established as the parkland standard for all purposes of this resolution.

2. Statement of Policy. With respect to residential subdivisions and developments to which this resolution applies at least five (5) acres of property for each 1,000 persons shall be devoted for park and recreational purposes by or at the expense of the subdividers and developers of the dwellings in which such persons shall reside.

B. The RPCC of Greene County shall adopt the plan, to be termed "A Master Plan for Parks and Open Space in Greene County, Ohio," which may constitute a part of a comprehensive land development plan, and which shall provide a guide for the recreational facilities within the planning jurisdiction, in accordance with the

parkland established by this resolution, the criteria set forth in Section F (2) (e) of this resolution and such other criteria as the RPCC may deem appropriate to accomplish the purposes of this resolution.

C. Provisions for Park and Recreational Facilities. Every subdivider or developer who files with the RPCC any proposal, plan or map for the subdivision or development of land within the planning jurisdiction, shall either dedicate a portion of such land, pay a fee-in-lieu of land dedication, or dedicate land and pay a fee-in-lieu of land dedication, as set forth in this resolution, for the purpose of providing park and recreation facilities to serve future residents of each such subdivision or development.

D. Amount of Land to be Dedicated. The amount of land to be dedicated by a subdivider or developer pursuant to this resolution shall be determined in accordance with the following formula:

Acres of Land = Total population as x.005

for dedication determined with

Section E of this

resolution.

E. Determination of Total Population.

1. Population factor. For the purpose of this resolution, a population factor for each dwelling planned for a subdivision or development shall be determined as follows:

Single Family Dwellings

Number of bedrooms Population Factor

1 1.75

2 2.50

3 3.25

4 4.00

Each additional bedroom

in excess of 4 1.00

Multi-Family Dwellings

Number of bedrooms Population Factor

1 1.50

2 2.25

3 3.00

Each additional bedroom

in excess of 3 .75

Mobile Home

Each mobile home space 2.25

2. Total Population. Total population for any subdivision shall equal the sum of the population factor of all dwellings to be included in the subdivision or development. For the purposes of this resolution, the RPCC shall determine the number and types of dwellings to be included in any subdivision or development on the basis of such relevant information as it may have or be able to obtain tending to show the same, including, without limitation, any plans, estimates, or statements of intention furnished by the subdivider or developer concerned relating to the proposed improvements of the subdivision or development, the nature, topography of the land involved, and the nature and kind of improvement actually planned or probable thereon.

F. Choice of Land or Fee-in-Lieu.

1. Determination by RPCC. The RPCC shall determine upon the advice of the Greene County Recreation and Parks Advisory Board whether a subdivider or developer shall dedicate land, pay a fee-in-lieu of land dedication, or provide a combination of land dedication and fee payment.

2. Procedure. In making the determination referred to in subsection (1) above, the following procedure shall apply:

a. Filings. At the time of filing the optional preliminary design plan map or the final development plan for approval, each subdivider shall, as part of such filing, indicate whether he plans to dedicate land for park and recreation purposes, to pay a fee-in-lieu of dedication, or to meet the requirements of this resolution by a combination of land dedication and fee payment. If such subdivider or developer plans to dedicate land, he shall indicate the area he desires to dedicate on the preliminary design plan map or development map.

b. RPCC Determination. After the RPCC, has reviewed such preliminary design plan maps and/or development plans, it shall determine whether the plans of the subdivider or developer to dedicate land, pay a fee-in-lieu of dedication, or provide a combination of dedication and fee payment are acceptable; provided that the RPCC shall make the determination so required within thirty (30) days of each submission unless the subdivider or developer agrees in writing upon an extended period for such determination. If the RPCC fails to make a determination within said thirty (30) day period, or within any agreed extension period, such submission shall be deemed to be approved. Insofar as practicable, the determination of the RPCC shall be compatible with the Master Plan for Parks and Recreation.

c. Minimum Dedication. Notwithstanding any other provision of this resolution, no dedication of land shall be required and a fee-in-lieu of dedication shall be paid in the event the amount of dedication required by this resolution would be less than one (1) acre, except in the event the land so dedicated could be added to the adjoining, contiguous land area of an existing park or recreational facility. This consideration shall not be construed to prohibit the voluntary dedication of lands by subdividers and developers in addition to the requirements imposed by this resolution.

d. Adverse Affect of Development; Reclamation. If, in the opinion of the RPCC, any portion of land proposed for dedication has been, or will be, adversely affected by the operation of a subdivider or developer and such land or portion thereof will require reclamation in order to render it suitable as a park or recreational facility planned therefor, the RPCC may require the subdivider or developer to furnish a plan for such reclamation. The RPCC shall seek the advice of the County Engineer with respect to any such plan, and shall determine, on the basis of such advice, whether such plan is acceptable in view of the purpose of this resolution. In the event such plan is acceptable, the subdivider or developer concerned shall implement such plan within a reasonable time. If the subdivider or developer fails to implement such reclamation plan prior to approval of the final development plan or subdivision plan, the RPCC may, without prejudicing any rights the County may have at law or in equity, withhold approval of the final development or subdivision until such reclamation has begun. Such required reclamation may, however, be covered in the developer's bond.

e. Criteria. In making its determination, the RPCC shall utilize the following criteria:

(1) Unity. Dedicated land must form a single parcel of land except in the event the RPCC determines that two or more parcels would be in the best public interest.

(2) Shape and Topography. The shape of the dedicated parcel of land must be sufficiently geometric to be usable for recreational activities such as softball, tennis, football and other active recreational pursuits. In addition, steep slopes, streams, lakes, water courses and flood plains may constitute a maximum of forty percent (40%) of the dedicated land, and a minimum of sixty percent (60%) of the recreational land requirement shall be suitable for dry ground recreational use. In this latter regard, fifty percent (50%) of the dry ground recreation area shall not exceed three percent (3%) grade, and the remaining dry ground recreation are shall not exceed five percent (5%) grade; provided, however, that this requirement may be waived, in whole or in part, if the RPCC determines that, although certain land areas to be dedicated are not usable for dry ground recreational use, such areas are of unique natural beauty or environmental or historic value.

(3) Location. Dedicated land must be centrally located in order to serve the recreation and open space needs of the subdivision or development for which the dedication was made. The recreation land in a subdivision or development must be located so that it is reasonable accessible from all dwelling units within the subdivision.

(4) Access. Public access and maintenance access to the dedicated land shall be provided by adjoining street frontage, allowing access to the dedicated parcel or parcels.

(5) Preservation of Natural Beauty. In all instances, natural features of scenic beauty such as trees, plant life, brooks and other watercourses, topography, historic locations, views and similar conditions which, if preserved, will add attractiveness and value to the dedicated land, shall be considered and preserved in the dedication of open space, parks, and recreation areas.

G. Fee-in-lieu of Dedication. In the event the RPCC determines that a subdivider or developer must pay a fee-in-lieu of land dedication, the amount of such fee shall be determined by the following formula:

Fee-in-lieu of = Land area that would x Fair

land dedication otherwise be required Market

to be dedicated Value

pursuant to Section

523 D of this resolution

H. Determination of Fair Market Value. For the purposes of this resolution, fair market value shall be determined as follows:

1. Time for Determination. Fair market value shall equal the average value per acre of all land in each subdivision or development in its raw, undeveloped state, determined by application of one of the following procedures:

(a) By agreement between the subdivider or developer and the RPCC; or

(b) In the event the subdivider or developer and the RPCC cannot agree, by determination of the RPCC on the basis of assessed value for property tax purposes of all land in the subdivision or development, modified to equal market value in accordance with current assessment practices, and divided by the total number of acres within the subdivision or development; or

(c) In the event the subdivider or developer objects to the valuation method set forth in subsection (b), by a qualified independent appraiser approved by the RPCC in accordance with the Ohio Revised Code; or

(d) In the event the subdivider or developer objects to all of the foregoing methods of valuation, by a three (3) member board of appraisers, one of whom shall be appointed by the RPCC, one whom shall be appointed by the subdivider or developer, and one of whom shall be selected by the two appraisers so appointed. The decision of a majority of such board shall be final.

I. Credit for Private Open Space

1. Allowance of Credit. In the event a subdivider or developer provides private open space for park and recreational purposes and such space is to be privately owned and maintained by the future residents of the subdivision or development, or by the subdividers or developer, and in the event the RPCC determines that such private open space adequately fulfills the park and recreation needs of the proposed subdivision or development, the fair market value of such areas shall be credited against the land dedication and park development fee requirement of this resolution.

2. Standards and Limitations. Notwithstanding the preceding subsection 1, the credit for private open space allowed only if the following standards are met:

(a) Yards, court areas, setbacks and other such open areas required by the zoning resolution shall not be included in the computation of such private open space;

(b) Private ownership, development and maintenance of the open space shall be assured by valid and enforceable undertakings on the part of the subdivider or developer, otherwise.

(c) The use of private open space is restricted for park and recreational purposes by recorded covenants that run with the land in favor of the future owners of property within the subdivision or development, and which cannot by their terms be defeated or eliminated without the consent of the RPCC.

(d) The proposed private open space is reasonably adaptable for park and recreational uses, taking into consideration such factors as size, shape, topography, geology, access and location of the private open space land; and

(e) Facilities proposed for the private open space are reasonable compatible with those required by the Parks and Recreation Plan.

J. Reduction of Minimum Lot Size and Frontage Requirements.

1. Land Dedication Only. In the event a subdivider or developer elects to fulfill the land dedication requirements of this resolution solely by dedicating land for park and recreational use, and such action is approved by the RPCC as provided in Section 523 F hereof, the minimum lot area standards and frontage requirements applicable to such subdivision or development provided in the zoning resolution may be reduced at the request of the subdivider or developer if approved by the appropriate township zoning commission up to ten percent (10%) and five (5%) respectively; provided, however, that in the event a lot size and frontage reduction pursuant to this subsection enable a subdivider or developer to erect additional dwellings, a fee-

in-lieu of land dedication in an amount determined in accordance with the provisions of Section 523 G of this resolution shall be required with respect to the additional population that would be generated by each proposed additional dwelling, as determined in accordance with Section 523 E of this resolution.

2. Land Dedication and Fee-in-Lieu. If the subdivider or developer elects to fulfill the requirements of this resolution only in part through the dedication of park land, and the RPCC approves of such action, the minimum lot are standards and frontage requirements applicable to such subdivision or development may be reduced if approved by the appropriate township zoning commission by a proportionate percentage amount of the respective 10% and 5% factors provided by subsection (1), determined by comparing the actual amount of dedicated land to the total land dedication required.

3. Additional Voluntary Land Dedication. In the event a subdivider or developer wishes to dedicate land for a park and recreational use in addition to the dedication and fee-in-lieu requirements of this resolution, subject to the approval of the RPCC and the appropriate township zoning commission, such subdivider or developer may reduce the minimum lot are requirements and frontage requirements applicable to such subdivision or development by subtracting the additional land area to be dedicated for park and recreational use for the land area to which the minimum lot area requirement would otherwise be applied, provided; however, that no such voluntary dedication shall result in a reduction of the minimum lot area requirements in excess of five percent (5%) in addition to the reductions allowed pursuant to section (1) hereof; and provided further, that no such additional reduction in minimum lot area requirements shall result in the erection of additional dwellings.

K. Treatment of Land to be Dedicated; Procedure for the Dedication of Land and Payment of Fees.

1. Following approval of a preliminary design plan or development plan which designates land for dedication, the existing vegetation (except growing commercial crops other than growing timber), topography, features of historic value, streams courses, soil, rock strata and other natural features of such dedicated land shall not be altered or their condition adversely affected in any way without the consent of the RPCC as required under Section 523 F 2.d.

2. Dedication of land to the County shall be by general warranty deed conveying to the County, and its successors and assigns, or to the Township Trustees, Township Park District, County Park District, or the State of Ohio, Department of Natural Resources, upon concurrence by the appropriate authority to receive land and the RPCC of Greene County, Ohio, good and marketable title to the real estate described in such deed, free and clear of all liens and encumbrances. This deed shall be executed and delivered to the County Recorder for recording prior to the approval of the final plat map or development plan of any section or any portion of the subdivision or development the boundary of which is contiguous with the proposed park and recreational facility. In the event that a final plat map or development plan of any portion of the subdivision or development the boundary of which is not contiguous with the proposed park and recreation facility is filed the developer shall place the required dedication in escrow or may receive total credit of the entire preliminary plat by an initial transfer at that time. Open space covenants for private park or recreational facilities shall be submitted to the County Recorder prior to approval of the final plat map or development plan and shall be recorded contemporaneously with the final plat map or development plan. In the event fees are required, the amount thereof shall be deposited with the County Commission prior to the approval and recording of the final plat map or development plan.

L. Limitation on Use of Land and Fees. Any land and fees received by the County pursuant to this resolution shall be used only for the purpose of providing park and recreational facilities to serve the area in which the subdivision or development concerned is located. Fees paid pursuant to this resolution shall be deposited in a Parks and Recreational Capital Improvement Fund to be used for the acquisition, development and improvement of park and recreational facilities. No part of such fees shall be used for the purpose of paying salaries, wages or other general operating expenditures. Fees received may be extended only in connection or development of parks and recreational facilities in reasonable proximity to the subdivision or development they are meant to benefit, after review and approval of the township trustees of the township from which the fee was obtained. Should the Board of County Commissioners and the appropriate board of township trustees fail to agree on the disbursement shall be submitted to the RPCC who is charged with binding arbitration. Parks and recreational facilities so developed shall continue to be maintained so long as the subdivision or development they are meant to benefit remains in use.

M. Adjustment Provisions. Notwithstanding any provision of this resolution to the contrary, the RPCC may in cases of an unusual or exceptional nature, allow for adjustments in the park land dedication and fee-in-lieu regulations and park development fee requirements as established in and required by the provisions of this resolution. Adjustments may be allowed when, in the opinion of the RPCC, it has been determined and satisfactory shown that the character of the particular subdivision or development and the park and recreation need generated by an associated with any subdivision or development sufficiently justify such an adjustment or adjustments.

ARTICLE 6

REQUIREMENTS FOR PLANNED

DEVELOPMENT

SECTION 601 GENERAL

Planned Developments are separate entities with a distinct character which is intended to be in harmony with surrounding developments. Projects which are designed solely to circumvent these regulations or other applicable zoning resolutions shall not be approved. The project must clearly demonstrate that natural features are being preserved, that amenities are being provided which would enhance the livability of the project and that such attributes of the project could not be achieved with strict adherence to these regulations.

Zoning approval of a Planned Development does not constitute subdivision approval, or in any way require modification of any particular design or construction standard.

SECTION 602 STANDARDS

A major element of the Planned Development is privately owned or publicly owned common property within the development. These developments usually contain such features as internal park network abutting home sites, recreational facilities, and preservation of natural amenities. A Home Owners Association, or in the case of non-residential development an owners association, shall be established to provide for the maintenance and use of all properties held in common.

Planned Unit Developers may be exempt from the conventional development standards of this resolution only upon proper justification by the developer, and approval by the RPCC of Greene County, Ohio,

The design of internal circulation systems shall be sensitive to such points of safety, convenience, access to dwelling units and non-residential facilities, separation of vehicular and pedestrian-bicycle traffic, and general attractiveness. Internal streets shall be adequate to carry anticipated traffic and yet provide convenient and safe access. Access for emergency vehicles must be considered.

SECTION 603 CONFORMITY TO EXISTING STREETS AND THOROUGHFARE PLAN

Whenever a Planned Development abuts or contains an existing or proposed major thoroughfare, the right-of-way (ROW) standards as contained in these regulations shall be applicable. If a Planned Development abuts or contains an existing minor residential street it must meet the requirements of these regulations.

SECTION 604 PRIVATE STREETS

Private streets may be permitted in Planned Developments and shall meet the requirements of this resolution unless specifically varied as prescribed for in Section 602. Private streets shall be owned and maintained by abutting property owners and other persons to whom the streets provided access.

If owners, in the future, request that the private streets be changed to public streets, before acceptance of such streets the owners will bear full expense to make the streets conform to the requirements applicable at that time for public streets (in accordance with the subdivision regulations of Greene County) as amended prior to dedication and acceptance.

Construction and material standards of this and other regulations shall apply.

SECTION 605 PUBLIC STREETS

The RPCC may require certain streets within the Planned Development to be public if it determines that the project density necessitates the use of public streets and traffic connections are required to adjacent plats or developments for adequate circulation.

SECTION 606 STAGING OF RESIDENTIAL PLANNED DEVELOPMENT

Each stage of Planned Development must be so designed so as to stand independently of future related stages in the event future stages are not constructed. The construction and provision of all the common open spaces and public and recreational facilities which are shown on the Final Development Plan must proceed at the same rate as the construction of dwelling units.

SECTION 607 COMMON OPEN SPACE GUARANTEE

The RPCC may require adequate assurance in a form and manner which it approves that the common open space shown in the Final Development Plan will be provided or that designated trees are preserved. The following methods of assurance may be used singularly or in combination.

A. A bond or other acceptable financial guarantee in a form which complies with the provision of these regulations and in an amount sufficient to purchase the common open space shown or trees shown on the Final Development Plan or alternative acreage which is equivalent in size and character.

B. The land shown as common open space may be put in escrow, the escrow agreement to provide that the land is to be held in escrow until the RPCC has certified to the escrow agent that the Planned Development has been completed.

C. If any of the Planned Development, which includes common open space, is held by the developer in option, the developer may assign to the applicable governmental entity the right to exercise the option to acquire the common open space.

SECTION 608 STAGING OF NONRESIDENTIAL CONSTRUCTION

If a Planned Development contains nonresidential uses, these uses may be constructed first, but only if the RPCC finds - and records its findings on the Final Development Plan - that the nonresidential uses are consistent with the Comprehensive Plan for the community even though the residential area of the Planned Development is not built or not completed.

SECTION 609 CONDOMINIUMS

Chapter 5311 of the Ohio Revised Code provides for the recording of ownership of condominiums. Condominium ownership does not excuse compliance with these regulations whenever appropriate.

ARTICLE 7

FOR FUTURE EXPANSION

ARTICLE 8

REQUIREMENTS FOR

CONSTRUCTION OF

IMPROVEMENTS

SECTION 801 BOND FOR INSTALLATION OF IMPROVEMENTS

A. General

In order that the County has the assurance that the construction and installation of such improvements as streets surfacing, curbs, gutters, sidewalks, public sanitary sewers, storm sewers, public water supply and street signs will be constructed, the subdivider shall enter into one of the following agreements:

1. To construct all improvements directly affecting the subdivision, as required by the RPCC, prior to the final approval of the plat; or

2. In lieu of the completion of the improvements, furnish bond executed by a surety company or certified check, or irrevocable letter of credit equal to the cost of construction of such improvements as shown on plans and based on an itemized estimate of the construction costs prepared by the engineer of the developer, **or executed contract for construction, which ever is greater**, submitted in triplicate, and subject to final approval of the County Engineer or Sanitary Engineer as applicable. **Under no circumstances shall the required performance bond, cash deposit or irrevocable letter of credit be tied to or be considered a portion of the developers financing for the development.**

B. CONDITIONS

Before the plan is given final approval by the RPCC, the developer shall have executed a performance bond or certified check or irrevocable letter of credit with the Board of County Commissioners covering the estimated cost of required improvements. Bonds shall be posted in the office of the RPCC of Greene County.

***** Section 801 Amended

Greene County Board of Commissioners - December 8, 1987

Regional Planning and Coordinating Commission - December 22, 1987

The performance bond or cash deposit or **irrevocable letter of credit** shall run to Greene County for a period of two (2) years from date of execution, and shall provide that the subdivider, his heirs, successors, and assigns, their agent or servants, will comply with all applicable terms, conditions, provisions, and

requirements of these and other pertinent regulations, and will faithfully perform and complete the work of constructing and installing such facilities or improvements in accordance with such laws and regulations.

Before said **performance bond, cash deposit, or irrevocable letter of credit** is accepted it shall be approved by the proper administrative officials.

Whenever a cash deposit is made, the same shall be made to the County Treasurer of Greene County.

C. EXTENSION OF TIME

If the construction or installation of any improvements or facility, for which guarantee has been made by the developer in the form of **performance bond, cash deposit, or irrevocable letter of credit** is not completed within two (2) years from the date of final approval of the record plan, the developer may request the Board of County Commissioners to grant an extension of six (6) months, provided he can show reasonable cause for inability to complete said improvements within the required two (2) years. The extension shall not exceed six (6) months. The request for an extension of time shall be accompanied by revised cost estimates of construction to be completed. The Board of County Commissioners may require the posting of a revised **surety** to cover increased costs on the advice of the County Engineer or Sanitary Engineer as applicable. At the expiration of the six (6) month extension Greene County will use as much of the bond or cash deposit as necessary to complete the construction of the improvements.

The same shall apply whenever construction of improvements is not performed in accordance with applicable standards and specifications.

D. COMPLETION OF WORK AND REDUCTION OF PERFORMANCE BOND, CASH DEPOSIT OR IRREVOCABLE LETTER OF CREDIT

As required improvements are completed, the Board of County Commissioners may, with concurrence of the appropriate county official, reduce the amount of the performance bond, cash deposit, **or irrevocable letter of credit, in the following increments: 25%, 50%, and 75%.** The remaining **25%** of the performance bond, cash deposit, **or irrevocable letter of credit** shall not be released until all construction, installation, and improvements required by the subdivider's contract have been completed and approved by the respective governmental authorities.

In the case of the surety reduction in the street and storm sewer bond, 50% completion shall include, at a minimum, installation of the first course of pavement.

Performance bonds, cash deposits, or irrevocable letter of credit for road storm drainage, water and sanitary sewer improvements shall not be released independently.

E. INSPECTIONS

Periodic inspections during the installation of improvements shall be made by Greene County to insure conformity with the approval plans and specifications as required by these and other regulations.

The subdivider shall notify proper administrative officials at least twenty-four (24) hours before each phase of the improvements is ready for inspection.

1. Normally these inspections for street and storm drainage shall be as follows:

a. Street coring operations.

b. Storm sewer and culvert installation.

c. Construction of manholes and catch basins.

d. Inspection of curb and gutter forms prior to placing concrete and gutter and sidewalks where required.

e. Placing of concrete for curb and gutter and sidewalks when appropriate.

f. Sub-base for street construction.

g. Placing of each lift of base.

h. During each phase of road surfacing operation.

i. Erecting road name signs.

2. Inspections for sanitary sewer and/or water shall be as preserved by the Rules and Regulations Construction Specifications of the Greene County Sanitary Engineering Department.

The absence of an inspector from a plat during construction shall not relieve the subdivider from full responsibility under this agreement.

F. PERFORMANCE BOND, CASH DEPOSIT, OR IRREVOCABLE LETTER OF CREDIT RELEASE

When the required improvements have been completed, the developer shall notify the County Engineer or Sanitary Engineer, as appropriate, in writing, of his desire for final inspection. Upon certification of acceptable completion of the installation of the required improvements by the County Engineer and Sanitary Engineer, the Director of the RPCC shall issue a letter to the Board of County Commissioners recommending release of the performance bond, cash deposit, or **irrevocable letter of credit**. The Board of County Commissioners shall issue a letter to the subdivider or his agent and such letter shall be sufficient evidence of the release by Greene County. When the proper administration officials, following inspection of a subdivision, certify to the Board of County Commissioners that all improvements have been constructed in accordance with County Specifications, the Board of County Commissioners may proceed to accept the facilities for which bond has been posted.

G. ACCEPTANCE

The improvements for which the performance bond, **cash deposit, or irrevocable letter of credit has** been posted shall be deemed accepted, when the Board of County Commissioners release said bond, unless otherwise stipulated.

H. FAILURE TO COMPLY

Whenever public improvements have not been constructed in accordance with the agreement and with specification as established, the Board of County Commissioners may exercise the right of foreclosure under the **performance bond, cash deposit, or irrevocable letter of credit.**

If in the opinion of the inspector, installations are improper or inadequate he shall issue a stop order. The developer may appeal the inspector's findings to the County Engineer and/or Sanitary Engineer within forty-eight (48) hours. Failure to comply with the inspector, County and/or Sanitary Engineers directive, will be deemed a violation of this Resolution.

SECTION 802 CONSTRUCTION PROCEDURE AND MATERIALS

The subdivider shall design and construct improvements not less than the standards outlined in these and other pertinent regulations. The work shall be done under county supervision and inspection shall be completed within the time fixed as agreed upon by the County Engineer and/or Sanitary Engineer.

A. The minimum requirements for materials and installation procedure for storm sewers and roads shall be in compliance with the current State of Ohio Department of Transportation Construction and Material Specifications unless otherwise superceded in these regulations.

B. The minimum requirements for materials and installation procedures for sanitary sewers and water lines shall be in compliance with the Rules and Regulations - Construction Specifications of the Sanitary Engineering Department.

SECTION 803 SURVEY MONUMENTS

A complete survey shall be made by a registered surveyor.

The traverse of the exterior boundaries of the tract and of each block, when computed from field measurements of the ground, shall close within a limit of error of one foot to ten thousand (10,000) feet of the perimeter before balancing the survey.

Permanent reference monuments made of stone or concrete, at least thirty-six (36) inches in length and six (6) inches square with suitable center point, shall be located and placed within the subdivision. The number and location of permanent reference monuments shall be determined in consultation with the County Engineer and their location noted on the record plan. These monuments shall be place immediately after final grading of lots is completed and the cost of the monuments will be included in the cost of improvements. There shall be no release of performance bond until after monuments have been placed.

A solid iron pin monument, five-eight (5/8) inch in diameter and thirty (30) inches long, shall be placed by the surveyor at all points on boundary lines where there is a change of direction and at all lot corners before the performance bond is released by the County. Prior to bond release a surveyor's certified statement shall be filed with the RPCC of Greene County attesting that all required monuments and iron pins are in place. Iron pins and monuments shall be flagged.

Prior to the placement of solid iron pin monuments each corner of a lot abutting a proposed public street will be indicated by clearly identifiable lot markers with lot numbers on the appropriate side of the markers. Markers or marks may be removed when pins are placed.

SECTION 804 PLANS AND PROFILES

Complete plans and profiles, signed and approved by a registered engineer, shall be made for all new streets and other improvements to be constructed in any subdivision subject to these regulations. Ten (10) sets of prints of the plans and profiles and estimated quantities shall be filed with the RPCC prior to approval of the final plan.

The plan and profile shall be on 22" or 24" x 36" plan profile linen sheets at a scale of 1"=40' horizontal, and 1"=6' vertical, or a size approved by the County Engineer and/or Sanitary Engineer. Plans and profiles shall show all necessary data in sufficient detail for the complete construction of all work and improvements to be made in the plat.

All grade elevations shall be based on U.S.G.S., on Miami Conservancy District datum. Contact the County Engineer's Office for available data before topographic survey of proposed plat is made.

More specifically, all plans and profiles shall show and include the following items:

GENERAL	
PLAN	**PROFILE**
1. Show all proposed lots, streets and curbs, etc.	1. Existing centerline and proposed top of curb profile.
2. Existing pavements, headwalls, piers, etc.	2. Centerline Stations.
3. Typical street and curb sections.	3. Curb elevations at minimum 50 foot stations.
4. Construction notes.	4. Label proposed cenerline and top of curb profile.
5. Structural details.	5. Profile of sewers and utilites in easements through lots.
6. North arrow (preferably up or to the right)	6. Sations and centerline elevations intersecting streets.
7. Street names.	7. Label "curb elevations" at upper left hand corner of profile grid.
8. Centerline stations (south to north and west to east where possible).	8. Insert tiltle box in lower right hand corner.
9. Easements for utilities and strom drainage.	
10. Pavement and right-of-way widths.	
11. Lot numbers and dimensions.	
12.Curb radius and intersections (if not covered in notes).	
13. Curve date; station of PC, PT, PCC	
14. Sheet reference	
15. Plat section lines (boundary lines) show stations.	
16. Demensions utility locations. Location and/or statement of adequate outlet for storm sewer as approved by the County Engineer.	
17. A 4 inch perforated drain pipe shall be required on both sides of the streed unless sufficient engineering detail is submitted by the develper to prove the installation is not needed. The pipe is to be placed in a 12 inch wide trench a minimum of 12 inches below subbase grade. In an estate street, the pipe shall have a satisfactory outlet with rodent screen and rip rap pad. In all other cses, the pipe shall be 12 inches behind the curb and tied into the nearest catch basin. The trech shall be backfilled with an appropriate sized washed gravel.	

STORM SEWER	
GENERAL PLAN	**PROFILE**
1. Show Proposed storm sewers, manholes, laterals, catch basins, headwalls, etc.	1. Show length size, grade of pipe.
2. Label each span (length and pipe size.)	2. Label storm sewer manholes, junction boxes, and show centerline of streets and
3. Station low points of grade and manholes.	3. Show invert elevations of all pipe at manholes, headwalls, junction boxes, etc., except laterals to catch basins.
	4. Show elevations on top of manhole or catch basin, when not in paved street or when in vettical curve portion of stree.

SANITARY SEWER AND WATER	
GENERAL PLAN	**PROFILE**
1. As prescribed by the rules and regulations and consruction specifications of the Greene County Sanitary Engineer.	1. As prescribed by the rules and regulations Greene and constructions of the Greene County Sanitary Engineer.

FINAL GRADING AND DRAINAGE PLANS

1. Direct water away from buildings;

2. Prevent standing water and soil saturation detrimental to structures and lot uses;

3. Provide for disposal of water from the lot;

4. Preserve such desirable lot features that do not interfere with the proper drainage of the lot or the desired use of the lot;

5. Provide grades for safe and convenient access to and around buildings and lot for their use and maintenance;

6. Protect adjacent properties from excessive water drainage.

7. Vertical distance from the floor of a "ground level" floor downward to the finished elevation of adjacent yard area shall not be less than eight inches, unless otherwise approved.

8. All drainage swales shall have adequate width and depth to carry the anticipated runoff.

9. All areas shall be sloped to a lower elevation off the lots or to the drainage structures on the lot.

10. Lots shall be shown to finished grade. Upon completion of a building, upon the lot, finish grades shall conform to those on approved final grading and drainage plan. Prior to building, all lots shall be rough graded to accomplish the intent and purpose of said approved plan.

11. Where determined necessary storm drainage from impervious surfaces and lots shall be tapped into the nearest storm drain.

12. Compliance with the Runoff Control Sediment Abatement Resolution for Greene County.

SECTION 805 RECOMMENDATION ORDER OF CONSTRUCTION FOR PROPOSED STREETS

A. PROCEDURE

1. Excavate and compact fill to proposed subgrade elevations.

2. Excavate and install all underground utilities, dispose of excavated material if not suitable for backfill as judged by County Engineer. Backfill with approved granular material in right-of-way areas. Trenches for utilities outside right-of-way limits may be backfilled with excavated material upon approval by the County Engineer.

3. Reshape, grade and compact subgrade to required cross section before installing any base material.

4. Install concrete curb and gutter and backfill same to prevent shifting or settlement.

5. Place and compact first course of base to proper line, grade and cross section.

6. Place and compact second course of base to finished grade, line and cross section.

7. Complete surface course by one of the recommended or alternate methods.

8. Grading and seeding within right-of-way on any undeveloped lots before bond is to be released.

SECTION 806 CLEARING AND SUBGRADE PREPARATION

The first step in the actual construction of a street shall be the clearing and grubbing and scalping of the right-of-way and the removal of material prior to starting excavation, embankment (compacted fill) or shaping.

All soft and/or wet areas encountered in the subgrade shall be removed and stabilized with crushed stone or other approved methods and/or properly drained by installation of French drains before preparation for the base is completed.

All roads shall be graded to their full width, including side slopes, and improved in conformance with standards given or referred to in these regulations.

The road shall then be cored to the proposed subgrade elevations, width of work area shall be two (2) feet greater than the dimension from back of curb to back of curb to allow space for forming of curbs. Embankment materials shall be of suitable type and shall be placed in uniform layers not to exceed eight (8) inches when using sheeps foot rollers or not to exceed four (4) inches when using other methods. Each layer shall be thoroughly compacted by rolling with a tamping roller until the "feet" of the roller ride clear without penetrating the earth, or compaction may be accomplished by the use of an approved pneumatic tired roller weighting 8 to 10 tons. In any case, the subgrade whether in cut or in fill shall be compacted to ninety-five (95) percent of Modified Protector Density.

Embankment and subgrade which does not contain sufficient moisture to be thoroughly compacted to require density shall be sprinkled with water and rolled. The surface of the subgrade shall be uniform and free of holes, depressions, ruts, and washes. In addition, when portland cement is to be applied, the subgrade shall be thoroughly moistened, but not muddied, prior to the placement of the cement. All subgrade work must be inspected by the County Engineer's representative prior to the placing of any base material.

Drainage: During the process of excavation, the roadway shall be maintained in such condition that it will be well drained at all times during construction.

SECTION 807 STREET STANDARDS

Street construction design is based upon the California Bearing Ratio (CBR) value of the soil subgrade. The Greene County Engineer's Office in corporation with the State Soil Conservation Service soils scientist and engineer, have established CBR values for each type of soil found in Greene County. For purposes of street construction standards, five classifications of soil have been established and an engineering design calculated for each classification. The Greene County Engineer shall reproduce soil maps of the area proposed for development available at a nominal charge. The consulting engineer shall superimpose the proposed street layout on the soil map so that proper design standards may be determined. Where more than one soil type of varying CBR values occurs on the proposed street, design shall be made on the basis of the lowest CBR. While actual on-site testing is recognized as the proper method of determining CBR values, the use of soil types may be utilized in lieu of on-site testing as a satisfactory substitute. The developer may be required or may at his discretion secure the services of a qualified soils testing laboratory which is acceptable to the County Engineer in order to provide additional soils data upon which to base CBR rating.

CBR VALUE	CLASSIFICATION	SOIL TYPE
6 and over	A	Casco, Eel, Eldena, Fox
		Genesse, Hennepin, Homer,
		Kendallville, Lewisburg,
		Manlove, Medway, Okcley,
		Rodman, Ross, Rush,
		Russell, Shoals, Sleeth,
		Stonelick, Thackery,
		Tippecanoe, Warsaw, Wea,
		Westland
5	B	Abington, Birkbeck, Celina
		Fairmount, Fincastle,
		Mahalasville, Miamian,
		Milton, Odell, Raub,
		Reeseville, Ritchey,

Wynn, Xenia

4 C Algiers, Brookston,

Channahon, Crosby, Henshaw

Kokomo, Millsdale,

Ragsdale, Randolph, Romeo,

Slone

3 D Montgomery, Patton

0 E* Carlisle, Edwards, Kerston

Linwood, Willkill, Warners

*Streets construction shall not be permitted in the "E" classification. Soil may be removed and replaced or stabilized and a new CBR value certified by an approved soils testing engineering consultant before construction will be permitted.

SECTION 808 STREET SURFACE CONSTRUCTION

A. ASPHALT CONCRETE

Number 404 Asphalt Concrete as per typical section with 0.5 gallon per square yard prime Number 408. (Thickness over two (2) inches to be laid in two (2) courses with the first course laid as soon as base has been compacted; the second course shall be laid one (1) year after first course.)

B. PORTLAND CEMENT CONCRETE

This item shall consist of construction of a portland cement concrete pavement on a prepared and approved subgrade, in accordance with Section 806 "Clearing and Subgrade Preparation." Where applicable, this item shall meet the requirements of Items 451, 452, and 499 of the State of Ohio Department of Transportation's "Construction and Material Specifications" and be in conformity with the lines, grades and typical sections shown on the standard drawings.

1. Concrete Pavement Thickness

a. The required thickness of concrete pavement shall be as follows:

450 Concrete Pavement	Local	Collector	Arterial
Portland cement Concrete	6"	8"	9"

b. When a collector or arterial is intersected by a local or minor street the thickness of the former street's pavement shall be constructed to the point of curvature of the curb return on the local or minor street.

2. Materials

a. Concrete

1) Concrete shall be composed of portland cement, aggregates and water. Air-entrainment shall be provided with air entraining portland cement and/or adding an air-entraining agent.

b. Portland Cement

1) Portland cement shall conform to the following specifications for type specified or permitted:

TYPE	SPECIFICATIONS
Portland Cement	AASHO M 85, ASTM, C150, CSA A5

Air-Entraining AASHO M 134, ASTM

Portland Cement C175

Portland Blast- AASHO M 151, ASTM

Furnace Slag C 205

Cement

Air-Entraining AASHO M 151, ASTM

Portland Blast- C 205

Furnace Slag

Cement

2) The Contractor shall provide suitable means for storing and protecting the cement against dampness.

3) Cement that for any reason has become partically set or that contains lumps or caked cement shall be rejected.

4) Cement salvaged from discarded or used bags shall not be used.

c. Aggregates

1) Fine aggregate for concrete shall conform to the requirements of AASHO M 6 or CSA A 23.1.4.4.

2) Coarse aggregate for concrete shall conform to the requirements of AASHO M 80 or CSA A 23.1.4.5.

a) Coarse aggregate shall be furnished in two separated sizes: either the No. 4 to 3/4-inch and the 3/4-inch to 1-1/2 sizes; or the No. 4 to 1-inch and 1-inch to 2-inch sizes, as specified.

b) Other sizes or combinations of sizes may be used when specified.

d. Water

1) Water used in mixing or curing shall be reasonably clean and free of oil, salt, acid, alkali, sugar, vegetable matter, or other substance injurious to the finished product.

2) Water shall be tested in accordance with and shall meet the requirements of AASHO T 26 or CSA A 23.1.5.2.

3) Water known to be potable may be used without test.

4) Where the source of water is relatively shallow, the intake shall be enclosed to exclude silt, and mud, grass, or other foreign materials.

e. Admixtures

1) No admixture shall be used in the concrete without prior approval, and all approved admixtures shall meet applicable AASHO, ASTM, and CSA requirements. Small amounts of accelerators such as chloride (a maximum of 2 percent by weight of cement) may be used to speed hardening of concrete in cold weather. Accelerators should not be used as a substitute for proper curing and frost protection.

2) Air-entraining agents shall have proven compatibility with all local concrete materials, including cement, and shall be capable of providing in the concrete the require air contents and air-void system known to produce durable, scale-resistant concrete.

3) Admixtures other than air-entraining agents shall not be used until trial mixes with job materials have shown them to be compatible at job temperatures.

4) Trial mixes must also show that desired properties will be imparted to the fresh concrete without any subsequent loss of strength or durability in the concrete.

f. Reinforcing For Concrete Pavements

1) Reinforcing steel shall conform to the following specifications;

Billet-Steel Bars for Concrete Reinforcement - AASHO M 31, ASTM A 15, or CSA G 30.2

Rail-Steel Bars for Concrete Reinforcement - AASHO M 42, ASTM A 16, or CSA G 30.2

Axle-Steel Bars for Concrete Reinforcement - AASHO M 53 or ASTM A 160

2) Fabricated-Steel Bars or Rod Mats, and Welded-Steel Wire Fabric, when specified, shall conform to the following specifications:

Fabricated-Steel Bars or Rod Mats for Concrete Reinforcement - AASHO M 55, ASTM A 185, or CSA G 30.5

3) Dowel and deformed bars shall conform to the requirements of AASHO M 31 or M 42, ASTM A 15 or A 16, or CSA G 30.1 or G 30.2 except that rail steel shall not be used for tiebars that are to be bent and restraightened during construction.

4) Dowel bars shall be plain round bars free from deformations restricting slippage in the concrete.

5) Before delivery to the site the work, on-half the length of each dowel bar shall be painted with on coat of lead or tar paint.

6) Sleeves for dowel bars to be used in expansion joints shall be metal of an approve design to cover 2 inches, plus or minus 1 inch of the dowel, with a closed end and with a suitable stop to hold the end of the sleeve at least 1 inch from the end of the dowel bar.

7) Sleeves shall be so designed that they do no collapse during construction.

g. Joint Materials

1) Poured filler for Types "A" Alternate, "B", "C", and "E" joints as shown on the standard drawings shall conform to the requirements of AASHO M 173 or ASTM D 1190.

2) Other types shall be approved by the Engineer before use.

3) Preformed fillers for Type "C" joint as shown on the standard drawings shall conform to the requirements of AASHO M 90 or M 153 or ASTM D 1751 or D 1752, as specified, and shall be punched to admit dowels where called for on the plans.

a) The filler for each joint shall be furnished in a single piece for the full depth and width required for the joint unless otherwise authorized by the Engineer.

b) When the use of more than one piece is authorized for a joint, the abutting ends shall be fastened securely and held accurately to shape by stapling or other positive fastening satisfactory to the Engineer.

h. Curing Materials

1) Curing materials shall conform to the following specifications:

Cotton Mats for Curing Concrete - AASHO M 73

Burlap Cloth made from Jute or Kenaf - AASHO M 73

Waterproof Paper for Curing Concrete - AASHO M 139 or ASTM C 171

Liquid Membrane - Forming Compounds for Curing Concrete - AASHO M 148, ASTM C 309, or CSA A 23.1.17.2.4

White Polyethylene Sheeting (Film) for Curing Concrete - AASHO M 171

3. Concrete

a. Proportioning

1) Proportioning shall be based on predetermined cement content. Except as otherwise provided herein, each cubic yard of concrete shall contain the specified weight of cement as determined by the yield test.

2) The water-cement ratio shall not exceed the maximum specified. Below this limit the quantity of water shall be adjusted to meet the slump requirements.

3) Concrete shall contain 6 1 percent of entrained air.

4) Slump shall be maintained within the range shown as nominal slump in the following table.

a) No concrete shall be used in the work that has a slump greater than that shown as maximum in the table.

b) When the slump is found to exceed the limit of nominal slump but is within the maximum limit, occasional loads of concrete may be used, provided an immediate adjustment is made in the mixture to reduce the slump of succeeding loads to within the nominal range shown.

NON. SLUMP MAX. SLUMP

TYPE OF WORK INCHES INCHES

Concrete pavement 1 - 3 4

(*305, 451, 452, 453, 611, 615)

Structural concrete 1 - 4 5

(*511, 610, 622 - excluding superstructure concrete)

Superstructure 2 - 4 4

concrete (*511)

Non-reinforced 1 - 4 5

concrete (*601, 602, 603, 604, 608, 609, 612, 613, 622)

*Equivalent to ODOT Item.

5) When used in paving, tests shall be made on plastic concrete after it is placed on the sub-base.

6) Tests for structure concrete shall be made at the site of the work at the time the concrete is being placed.

7) The weights of fine and coarse aggregate shall be determined by the weights given in the Concrete Table, using not to exceed the water-cement ratio shown and the range in slump stated.

8) If high-early-strength concrete is not specified, high-early-strength cement meeting requirements of ODOT Item 701,02 and Item 701.05 shall be used.

9) If high-early-strength concrete is not specified, but is desirable to expedite the work, the Contractor may use, at his own expense, high-early-strength cement, additional cement, approved chemical admixtures, or a combination of these materials, as approved by the County Engineer.

10) The weights specified in the Concrete Table were calculated for aggregates of the following bulk specified gravities: natural sand and gravel 2.62, limestone sand 2.68, limestone 2.65, slag 2.30.

11) For aggregates of specific gravities differing more than plus or minus 0.02 from these, the weights in the table shall be corrected as indicated in paragraph 12 (c).

CONCRETE TABLE

Quantities Per Cubic Yard

Dry Aggregates

Water-

Fine Course Cement

Type of Aggre-	Aggre-	Cement	Ratio
Coarse	gate	gate	Total Content Max-
Aggregate	(lb)	(lb)	(lb) (lb) imum
CLASS C (Using No 57 Size)			
Gravel	1160	1735	2895 600 0.50
Limestone	1285	1630	2915 600 0.50
Slag	1350	1360	2710 600 0.50

12) At any time during the construction period, the relative weights of fine and coarse aggregate as determined from the above table may be varied by the Engineer in order to insure a workable mix within the slump range and to control the yield. However, the total weight of aggregate per cubic yard shall not be changed except as provided in the preceding paragraph as for the following conditions or both.

a) For bath weights, the weights determined as described above shall be corrected to compensate for moisture contained in the aggregates at the time of use.

b) If it is found impossible to prepare concrete of the proper consistency without exceeding the maximum water-cement ratio specified, a water reducing admixture conforming to requirements of Supplemental Specifications 808 shall be used or the cement content shall be increased. However, the Contractor shall not be compensated for the admixture or additional cement which may be required by reason of such adjustment.

c) If, during the progress of the work, the specific gravity of one or both of the aggregates changes, the batch weight shall be adjusted to conform to the new specific gravity.

d) Unit weight determinations shall be made and the yield shall be calculated in accordance with the method on file with the County Engineer. Based on these determinations the batch weights will be adjusted when necessary. However, the specified cement content shall be maintained and the maximum water-cement ration shall exceed.

e) The amount of mixing water shall be adjusted for the moisture which they will absorb, in order to determine the amount of water to be added at the mixer.

13) Slump shall be determined using AASHO T 119, ASTM C 1453, or CSA A 23.2.20 and air content using AASHO T 152, ASTM C 231, or CSA A 23.2.19 for gravel and stone coarse aggregate and ASTM C 173, or CSA A 23.2.19 for slag and other highly porous aggregate.

14) Test specimens shall be made, cured, and tested in accordance with AASHO T 23, ASTM C 31, or CSA A 23.2.14 and T 97, ASTM C 78, or CSA A 23.2.15 or ASTM C 293 and the cement content determined in accordance with AASHO T 121 or ASTM C 138.

15) Job site adjustments, when necessary, shall be ordered by the Engineer.

16) If it becomes impossible to obtain concrete of desired plasticity and workability with the proportions originally designated, the County Engineer shall change aggregate weights as required, maintaining the cement content originally designated.

17) No change in the source or character of material shall be made without due notice to, and approval by, the County Engineer.

b. Mixing Equipment

1) General

a) Concrete may be mixed at the site of construction at a central point, whole or in part in truck mixers.

b) Each mixer shall be of an approved type and shall have attached prominently a manufacturer's plate showing the capacity of the drum in terms of volume of mixed concrete and the speed of rotation of the mixing drum or blades.

2) Mixers at Site of Construction

a) Mixing shall be in an approved mixer capable of combining aggregates, cement, and water into a thoroughly mixed and uniform mass within the specified mixing period and capable of discharging the mixture without segregation.

b) The mixer shall be equipped with an approved timing device which will automatically lock the discharge lever when the drum has been charged and release it at the end of the mixing period.

c) The device shall be equipped with a bell or other suitable warning device adjustment to give a clearly audible signal each time the lock is released.

d) If the timing device fails, the mixer may be used for the balance of the day while it is being repaired, provided that each batch is mixed 90 seconds.

3) Truck Mixers and Truck Agitators

a) Truck mixers used for mixing and hauling concrete and truck agitators used for hauling central-mixed concrete shall conform to the requirements of AASHO M 157 or CSA A 23.1.12.

4) Non-Agitator Trucks

a) Bodies of non-agitating hauling equipment for concrete shall be smooth, mortar tight metal containers capable of discharging the concrete at a satisfactory controlled rate without segregation.

b) Covers shall be provided when needed for protection.

c. Handling, Measuring, and Batching Materials

1) Aggregate stockpiles shall be built up in layers of not more than 3 feet in thickness, and each layer shall be completely in place before beginning the next layer.

2) No coning of aggregates shall be allowed.

3) Aggregates shall be handled from stockpiles or other sources to the batching plant in such manner as to secure a uniform grading of the material.

4) Aggregates that have become segregated or mixed with earth or foreign material shall not be used.

5) All aggregates produced or handled by hydraulic methods and washed aggregates shall be stockpiled or binned for draining at least 12 hours before being batched.

6) The fine aggregate and each size of coarse aggregate shall be separately weighed in the amounts set by the County Engineer in the job mix.

7) Cement shall be measured by weight.

8) Batches may be rejected unless mixed within 1-1/2 hours after the cement comes in contact with the aggregates.

9) Batches shall be delivered to the mixer separate and intact, without loss of cement and without spilling of material from one batch to another.

10) Batching shall be so conducted as to result in the weights of each material required within a tolerance of 1 percent for cement and 2 percent for aggregates.

11) Water may be measured either by volume or by weight. The accuracy of measuring the water shall be within range of error of not over 1 percent.

12) Unless the water is to be weighed, the water-measuring equipment shall include an auxiliary tank from which the measuring tank shall be filled.

13) The measuring tank shall be equipped with an outside tap and value for checking the setting unless other means are provided for readily and accurately determining the amount of water in the tank.

14) The volume of the auxiliary tank shall at least equal that of the measuring tank.

15) Methods and equipment for adding air-entraining agents or other admixtures to the batch shall be approved by the County Engineer.

16) All admixtures shall be measured into the mixer with an accuracy of plus or minus 3 percent.

d. Mixing Concrete

1) Mixing time shall be measured from the time all materials, except water, are in the drum.

2) Ready mixed concrete shall be mixed and delivered in accordance with requirements of AASHO M 157, or CSA A 23.1.12.

3) When mixed at the site of the work or in a central mixing plant, the mixing time shall not be less than 50 seconds.

4) Mixing time, which includes transfer time in multiple-drum mixers, ends when the discharge chute opens.

5) The contents of an individual mixer drum shall be removed before a succeeding batch is emptied therein.

6) The approved mixer shall be operated at the drum speed shown on the manufacturer's name plat.

7) Any concrete mixed less than the specified time shall be discarded and disposed of by the Contractor at his expense.

8) The bath shall be so charged into the drum that a portion of the mixing water shall enter in advance of the cement and aggregates.

9) The flow of water shall be uniform, and all water shall be in the drum by the end of the first 15 seconds of the mixing period.

10) The throat of the drum shall be kept free of accumulations that may restrict the free flow of materials into the drum.

11) Mixed concrete from a central mixing plant shall be transported in truck mixers, truck agitators, or non-agitating trucks having special bodies.

12) When the concrete is hauled in nonagitating trucks, no more than 30 minutes shall elapse from the time water is added to the mix until the concrete is deposited in place at the site of the work.

13) When it is hauled in truck mixers or truck agitators, the limit shall be 60 minutes.

14) Retempering concrete by adding water or by other means shall not be permitted.

15) Concrete that is unsuitable for placement as delivered shall be rejected.

4. FORMING

a. General

1) Forms shall be of such cross-section and strength and so secured as to resist the pressure of the concrete when placed and the impact and vibration of any equipment which they support, without springing or settlement.

2) The method of connection between sections shall be such that the joints shall not move in any direction.

3) The maximum deviation of the top surface shall not exceed 1/8-inch in 10 feet or the inside face not more than 1/4-inch in 10 feet from a straight line.

4) Steel forms shall be used on straight runs unless otherwise approved by the Engineer.

b. Setting Forms

1) The subgrade under the forms shall be compacted and cut to grade so that the form when set will be uniformly supported for its entire length at the specified elevation.

2) The supply of forms shall be sufficient to permit their remaining in place for at least 12 hours after the concrete has been placed.

3) All forms shall be cleaned and oiled each time they are used.

c. Grade and Alignment

1) The contractor shall check and correct alignment and grade elevations of the forms immediately before placing the concrete.

2) When any form has been disturbed or any grade has become unstable, the form shall be reset and rechecked.

d. Optional Requirements

1) Instead of using fixed forms, the Contractor may use a slip-form paver.

2) A subgrade machine or machines will be required to operate in front of the slip-form paver.

3) Equipment supplies must provide tracks and a subgrade for the paver to ensure that the finished surface will conform to the plans.

4) If any traffic is allowed to use the prepared grade, the grade shall be checked and corrected immediately ahead of the placing of the concrete.

5. PLACING AND FINISHING

a. General

1) The concrete shall be deposited on the grade in such a manner as to require as little rehandling as possible.

2) Placing shall be continuous between transverse joints without the use of intermediate bulkheads.

3) Necessary hand-spreading shall be done with shovels, not rakes.

4) Workmen shall not be allowed to walk in the freshly mixed concrete with boots or shoes coated with earth or foreign substances.

5) Concrete shall be thoroughly consolidated against and along the faces of forms and along the full length and on both sides of all joint assemblies.

6) Vibrators shall be permitted to come in contact with a joint assembly, the grade, or the side form.

7) The vibrator shall never be operated longer than 15 seconds in any one location.

8) Concrete shall be deposited as near to expansion and contraction joints as possible without disturbing them but shall not be dumped onto a joint assembly.

b. Strike-off, Consolidation, Finishing

1) The sequence of operations shall be the strike-off and consolidation, floating if necessary, straight-edging, and final surface finish.

2) The pavement shall be struck off and consolidated with a mechanical finishing machine, vibrating screed, or by hand-finishing methods when approve by the Engineer.

3) A slip-form paver with provision for integral curb may be used.

4) In general, adding water to the surface of the concrete to assist in finishing operations shall not be permitted.

5) If the addition of water to the surface is permitted, it shall be applied as a fog spray with approved spray equipment.

6) After the pavement has been struck off and consolidated, it shall be scraped with a straight-edge 10 feet long equipped with a handle to permit operation from the edge of the pavement.

7) Any excess water and laitance shall be removed from the surface of the pavement.

8) The straight-edge shall be operated parallel to the centerline of the pavement and shall be moved forward one-half its length after each pass.

9) Irregularities shall be corrected by adding or removing concrete.

10) All disturbed places shall be again straight-edged.

11) The use of long-handled wood floats shall be confined to a minimum; they may be used only in emergencies and in areas not accessible to finishing equipment.

12) Before final finishing is completed and before the concrete has taken its initial set, the edges of the slab and curb shall be carefully finished with an edger of the radius shown on the plans.

13) A burlap drag may be used for final finishing.

a) The drag shall be at least 3 feet wide and long enough to cover the entire pavement width.

b) It shall be kept clean and saturated while in use.

c) It shall be laid on the pavement surface and dragged in the direction in which the pavement is being placed.

14) A broom drag may be substituted in place of the burlap drag when specified by the County Engineer.

a) The broom shall be long enough to cover the entire pavement width being finished.

b) The broom shall be kept clean of accumulated concrete while in use.

c) It shall be laid on the pavement surface and dragged on the rails or above the rails in the direction in which the pavement is being placed.

c. Integral Curbs

1) Integral curbs shall be required along the edges of all street pavement where shown on the plans and shall be formed to cross-section in accordance with the plans and as shown on the standard drawings.

2) They shall be constructed simultaneously with the pavement with extrusion equipment or hand formed immediately after the finishing operations.

3) The drainage at the gutter may be checked while the concrete is still plastic by pouring water on to a piece of burlap at the gutter summit and observing its flow to the nearest inlet.

4) Necessary corrections shall be made at this time and the curb shall then be given a burlap-textured finish to match the pavement.

d. Pavement Protection

1) The contractor shall have available always materials to protect the surface of the plastic concrete against rain.

2) These materials shall consist of burlap, cotton, mats, curing paper, or plastic sheeting.

3) When step form construction is being used, materials such as wood planks or forms to protect the edges of the pavement shall also be required.

6. CURING

a. General

1) Concrete shall be cured by protecting it against loss of moisture, rapid temperature change, and mechanical injury for at least 3 days after placement.

2) Moist curing, waterproof paper, white polyethylene sheeting, white liquid membrane compound, or a combination thereof, may be used.

3) After finishing operations have been completed, the entire surface of the newly placed concrete shall be covered by whatever curing medium is applicable and approved by the County Engineer.

4) The edges of concrete slabs exposed by the removal of forms shall be protected immediately to provide these surfaces with continuous curing treatment equal to the method selected for curing the slab and curb surface.

5) The contractor shall have the equipment needed for adequate curing at hand and ready to install before actual concrete placement begins.

6) If the curing medium requires the use of water, the curing shall have prior right to available water over the creation of new concrete.

b. Moist Curing

1) Moist curing shall be accomplished by a covering of burlap or other approved fabric mat used singly or in combination.

2) Curing mats shall be thoroughly wet when applied and kept continuously wet and in intimate contact with the pavement surface for the duration of the moist curing period.

3) Burlap of fabric mats shall be long enough to cover the entire width and edges of the pavement lane and lapped at joints to prevent drying between adjacent sheets.

c. Waterproof Paper or Polyethylene

1) Waterproof paper or white polyethylene sheets shall be in pieces large enough to cover the entire width and edges of the slab and shall be lapped not less than 12 inches.

2) The paper or polyethylene shall be adequately weighted to prevent displacement or billowing due to wind and material folded down over the side of the pavement edges shall be secured by a continuous bank of earth.

3) Tears or holes appearing in the paper or polyethylene during the curing period shall be immediately repaired.

d. Membrane

1) This method of curing shall be applies behind the final finishing operation after all free water has disappeared from the surface.

2) Complete and uniform coverage at the required rate of 200 square feet per gallon shall be required.

3) The compound shall be kept agitated to prevent the pigment from settling, and it shall be applied to the pavement edges immediately after the forms have been removed.

4) Membrane curing will not be permitted in frost-affected areas on paving that will be exposed to de-icing chemicals within 30 days after completion of the curing period.

e. Cold Weather Protection

1) Except by specified written authorization, concreting shall cease when the descending air temperature in the shade and away from artificial heat falls below 40 degrees F.

2) It shall not be resumed until the ascending air temperature in the shade and away from artificial heat rises to 35 degrees F.

3) When concrete has been placed in cold weather and the temperature may be expected to drop below 35 degrees F., straw, hay, insulated curing blankets, or other suitable material shall be provided along the line or work.

4) Whenever the air temperature may be expected to reach the freezing point during the day or night, the material shall be spread over the concrete deep enough to prevent freezing of the concrete.

5) Concrete shall be protected from freezing temperatures until it is at least 5 days old.

6) Concrete injured by frost action shall be removed and replaced at the Contractor's expense.

7. JOINTS

a. General

1) Contraction joints, expansion joints, and all longitudinal joints shall be placed as indicated on the plans and as shown on the standard drawings.

2) Transverse construction joints shall be used as required.

3) Transverse joints shall extend continuously through the pavement and curb.

b. Transverse Contraction Joints.

1) Transverse contraction joints shall consist of planes of weakness created by forming or cutting grooves in the surface of the pavement.

2) They shall be equal to at least one-fourth the depth of the slab.

3) Transverse strip contraction joints shall be formed by installing a parting strip to be left in place.

4) Formed grooves shall be made by depressing an approved tool or device into the plastic concrete.

a) The tool or device shall remain in place until the concrete has attained its initial set and shall then be removed without disturbing adjacent concrete.

5) Sawed contraction joints shall be created by sawing grooves in the surface of the pavement with an approved concrete saw.

a) After each joint is sawed, the saw cut and adjacent concrete surface shall be thoroughly cleaned.

6) Sawing of the joints shall begin as soon as the concrete has hardened sufficiently to permit sawing without excessive raveling, usually 4 to 24 hours.

a) All joints shall be sawed before uncontrolled shrinkage or cracking occurs.

b) If necessary, the sawing operations shall be carried on both day and night, regardless of weather conditions.

c) A standby saw shall be available in the event of breakdown.

7) The sawing of any joint shall be omitted if a crack occurs at or near the joint location before the time of sawing.

a) Sawing shall be discontinued if a crack develops ahead of the saw.

b) In general, all joints shall be sawed in sequence.

c) All contraction joints in lanes adjacent to previously constructed lanes shall be sawed before uncontrolled cracking occurs.

d) If extreme conditions make it impracticable to prevent erratic cracking by early sawing, the contraction joint grove shall be formed before initial set of concrete, as provided above.

8) Transverse formed contraction joints shall consist of a groove or cleft extending downward from and normal to the surface of the pavement.

a) These joints shall be made while the concrete is plastic by an approved mechanically or manually operated device to the dimensions indicated on the plans.

c. Transverse Construction Joints

1) Transverse construction joints of the type shown on the plans shall be placed whenever the placing of concrete is suspended for more than 30 minutes.

2) A butt joint with dowels or a thickened-edge keyed joint shall be used if the joint occurs at the location of a joint.

3) Keyed joints with tiebars shall be used if the joints occurs at any other location.

d. Transverse Expansion Joints

1) The expansion joint filler shall be continuous from form to form, shaped to the subgrade, curb section, and to the keyway along the form.

2) Preformed joint filler shall be furnished in lengths equal to the pavement width or equal to the width of one lane.

3) Damaged or repaired joint filler shall not be used unless approved by the County Engineer.

4) The expansion joint filler shall be held in a vertical position.

a) An approved installing bar or other device shall be used if necessary to ensure proper grade and alignment during placing and finishing of the concrete.

b) Finished joints shall not deviate in horizontal alignment more than 1/4-inch from a straight line.

c) If joint fillers are assembled in sections, there shall be no offsets between adjacent units.

d) No plugs of concrete shall be permitted anywhere within the expansion space.

e. Longitudinal Center Joints

1) Longitudinal center joints shall consist of planes of weakness created by forming or cutting grooves in the surface of the pavement.

2) They shall be equal to at least one-quarter of the depth of the slab plus 1/4-inch.

3) Sawed longitudinal center joints shall be sawed grooves made with a concrete saw after the concrete has hardened.

a) The joint may be sawed at any time before opening if construction traffic does not use the pavement.

f. Longitudinal Construction Joints

1) Longitudinal construction joints shall be of the dimensions shown on the plans.

2) Where a key is required, it shall be constructed by forming when the first lane adjacent to the joint is placed.

3) These joints shall be finished with an edger of the radius shown on the plans.

4) When placing the second slab, concrete must not be left overhanging the lip formed in the first slab by the edging tool.

g. Sealing Joints

1) Joints to be sealed shall be filled with joint-sealing material, before the pavement is opened to traffic and as soon after completion of the curing period as is feasible.

2) Just before sealing, each joint shall be thoroughly cleaned of all foreign material, including membrane curing compound, and the joint faces shall be clean and surface-dry when the seal is applied.

3) Material for seal applied hot shall be stirred during heating to prevent localized overheating.

4) The sealing material shall be applied to each joint opening in accordance with the details shown on the plans or as directed by the County Engineer.

a) The joint filling shall be done without spilling material on the exposed surfaces of the concrete.

b) Any excess material on the surface of the concrete pavement shall be removed immediately and the pavement surface cleaned.

c) The use of sand or similar material to cover the seal shall not be permitted.

d) Joint-sealing material shall not be placed when the air temperature in the shade is less than 50 degrees F., unless approved by the County Engineer.

8. TESTING AND ACCEPTANCE REQUIREMENTS

a. Test and Specimens

1) The contractor shall furnish the concrete and make the castings, test beams and cylinders at his expense.

2) Two (2) beams or two (2) cylinders shall be made for each 2,000 square yards or fraction thereof of pavement placed, but not less than (2) pairs of beams or cylinders for any one day's work.

3) The beams shall be cured by the method specified for the pavement in AASHO T23, ASTM C31, or CSA A23.2.14.

4) The County Engineer or an independent testing laboratory approved by the County Engineer shall fabricate the test specimens.

5) Results shall be reported to the Engineer.

b. Air Tests

1) The air content shall be measured by the pressure method or by the volumetric method.

2) Checks shall be made as often as necessary, but at least twice daily, to assure uniform air content.

3) A pocket air indicator (AE55) may be used to determine the approximate air content and signal the need for checks by one of the above methods.

c. Thickness

1) The County Engineer, when in doubt as to thickness of the completed pavement, may require core tests for determining actual thickness and for outlining areas of deficient thickness, at the contractors expense.

2) Cores shall be taken at not less than 100-feet intervals, at the contractors expense.

3) Thickness will be averaged between core holes.

4) Deduction for deficiency in thickness shall be made according to the following table:

Deficiency in Thickness	Proportional Part of Contract Price Allowed
0.00 in. to 0.25 in.	100 percent
	(Actual Thickness)2
0.26 in. to 0.50 in.	Ration
	(Specified Thickness)2
Greater than 0.50 in.	None

d. Strength Tests

1) Cylinders tested in compression shall have a daily average strength at 28 days of not less than 4,000 psi.

2) Beams shall have a daily average flexural strength at 28 days of not less than 550 psi when tested by the third-point loading method or 650 psi when tested by the center-point loading method.

3) The above testing shall not be construed as the controlling factor in the design of the mix, but rather a measurement of the quality of the material placed in the work.

9. OPENING TO TRAFFIC

a. The County Engineer shall decide when the pavement shall be opened to traffic.

b. It shall not be opened to traffic until speciment cylinders or beams conforming to the "Testing and Acceptance Requirements" of these specifications have attained a flexural strength of 500 psi when tested by the third-point loading method, or a compressive strength of 4,000 psi.

c. If such tests are not conducted, the pavement shall not be opened to traffic until 14 days after the concrete is placed.

d. Before opening to traffic, the pavement shall be cleaned.

SECTION 809 BASE CONSTRUCTION SPECIFICATIONS

Contractor shall notify County Engineer one (1) week prior to construction of base as to the source of the materials he intends to use for the base.

After installation of underground utilities and curb and gutter, subgrade shall be regarded to require cross-section before installation of any base material.

Place and compact first course of base to required line and grade. Material shall be graded to required cross-section and compacted to required density before placing following course.

Place and compact second course to base to finished line and required cross-section. Aggregate for these courses shall conform to Ohio Department of Transportation Specifications, Section 703.04 for aggregate base: Item 304 to 411.

SIEVE SIZE	ITEM 304 % PASSING	ITEM 411 % PASSING
2 inch	100	100
1 inch	70 - 90	75 - 100
3/4 inch	50 - 85	---
Number 4	25 - 60	25 - 60
Number 40	7 - 30	7 - 30
Number 200	0 - 15	0 - 15

If gravel is used, that portion retained on a Number 4 sieve shall contain not less than 40% fractured pieces.

The finished surface shall not vary more than 3/8 inch from a ten (10) foot straight edge parallel to the centerline not more than 1/2 inch from a template conforming to the required cross-section. The contractor shall furnish straight edge, templates, or other devices satisfactory to the County Engineer and check the surface for conformance with these requirements.

The base shall be sprinkled as required to maintain the moisture content until covered by subsequent construction.

As an alternate for base construction, full-depth Item Number 301 - Bituminous Aggregate, will be accepted.

Base shall be in accordance with State of Ohio specifications and to be depth as specified in Greene County standards. Each course of 301 shall be tacked, 0.1 gallon per square yard, Item 407 prior to placing of subsequent course.

SECTION 810 STORM SEWER DESIGN

Storm sewers in proposed developments and streets shall be designed by the rational method according to the following formula: Q = CiA.

Where Q = Runoff in cubic feet per second (cfs)

C = Runoff coefficients. The minimum runoff coefficients are listed below according to development density.

i = rainfall intensity in inches per hour for a given rainfall period. All storm sewer design will be based on a 10-year storm and the intensity i(10) may be calculated by the formula 9(10) - 16/ where t is the inlet time or the time required for runoff from the most distant point to reach the inlet in question plus the lapsed time interval, based on the velocity in the pipe or open ditch. At the present time, the original inlet time being studied and will be provided later. Runoff (Q) for open ditches, culverts, and structures, will be calculated by the above rational formula based on a 25-year storm. For a 25-year storm i(25) = 1.2 9(10).

A. Agricultural and Residential Use:

Average Units

Per Acres Coefficient

1 unit or less 0.35

2 units 0.40

3 units 0.45

4-15 units 0.60

above 15 To be determined in consultation with the County Engineer.

B. Business and Industrial Use:

The runoff coefficient for these uses will vary according to the area occupied by the buildings, sidewalks, streets, and parking areas. Each proposed plan will be evaluated separately to determine the runoff coefficient. If no proposed plan is available when designing the storm sewer system, runoff coefficient of 0.90 will be used. All plans and calculations used in evaluating the runoff coefficients will be submitted along with the compution sheets of the storm sewer design.

The velocity of flow in pipes and open ditches will be calculated in accordance with the Manning's Formula:

$$V = \frac{1.486}{n} R^{2/3} S^{1/2}$$

Where V = Velocity in feet per second

N = Manning's roughness coefficient

Concrete pipe n = 0.012

open ditches n - 0.030

R = Hydraulic radium

(Area - Wetted Perimeter)

S = Slope in feet per foot.

The minimum velocity in pipes and open ditches shall be two (2) feet per second under full flow conditions. The maximum discharge velocity from any storm sewer or culvert into an open channel shall not exceed the permissible velocity for the open channel obtained by calculations determined by the methods described in the manual, Water Management and Sediment Control for Urbanizing Areas, published by the Soil Conservation Service of the United States Department of Agriculture. When the design velocity in the storm sewer or culvert exceeds the permissible velocity for the open channel by a satisfactorily design transition or structure.

Three (3) copies of all drainage calculations and grading drawing s shall be submitted with or before the submission of the construction drawings including but not limited to the following:

1. A map showing the complete drainage layout. The map should be at a scale of 1 inch to 100 feet with 2 foot contours. Included on this map will be the incremental acreages contributing to each section.

2. A map outlining each drainage basin which contributes to the area being studied. This can be the U.S.G.S. map. All areas covered by county ditches shall be known on this map.

3. A computation sheet of the storm sewer design.

4. The calculations and cross-sections of existing and proposed open ditches.

SECTION 811 PIPE CULVERT DESIGN

All pipe culverts crossing transversely under a road or street shall be designed in accordance with the latest State of Ohio, Department of Transportation specifications based on the U.S. Bureau of Public Roads Standards as set forth in Hydraulic Engineering Circular Number 5. All pipe culverts shall extend to the right-of-way lines of the road or street. A calculation sheet will be submitted with the culvert design.

SECTION 812 PIPE REQUIREMENTS

Pipe for storm sewers shall be reinforced concrete pipe and shall be extended to a natural water way on site of off-site. All storm lines shall be located within the road right-of-way line or within an easement.

All storm sewers shall conform to the minimum requirements for cover as specified by the manufacturer.

Where different size storm sewer pipes enter a storm manhole the tops of the inner diameter shall be held at the same elevation. Elevations shall be shown on the storm sewer profile for each of the inverts on the different pipes.

All storm sewers shall generally be offset parallel to and eight (8) feet from the centerline of the proposed roads or streets or as approved by the County Engineer.

Minimum diameter of storm sewer laterals shall be twelve (12) inches.

Storm water flow in street gutters shall be intercepted by catch basins spaced at a maximum distance of 350 feet on streets and roads with grades less than three percent (3%); maximum spacing of catch basins on streets and roads with grades more than three percent (3%) shall be 300 feet.

Storm manholes shall be spaced at a maximum distance of 300 feet unless otherwise directed by the County Engineer.

SECTION 813 BRIDGE STRUCTURES

All structures will be designed according to the American Association of State Highway and Transportation officials (AASHTO) HS20-44 loading. All structures shall be the width of the pavement plus four (4) feet additional on each side. They shall be adequately protected with guard rails in accordance with the State of Ohio Standard Design Specifications.

SECTION 814 CATCH BASINS

Catch basins shall meet Greene County Standard Drawings Type "A" or Type "B". All catch basins will be required to have reinforced concrete aprons; all metal castings shall conform with American Society for Testing and Materials Standards.

SECTION 815 STORM MANHOLES

Storm manholes shall meet Greene County Standards Drawing Type "A" or Type "B". All manholes will be either pre-cast or plastered inside and out. All metal castings shall conform with American Society for Testing and Materials Standards.

SECTION 816 HEADWALLS

Headwalls shall meet Greene County standards.

SECTION 817 PIPE CULVERT ENDS

Pipe culvert ends shall meet Greene County standards.

SECTION 818 ROCK CHANNEL PROTECTION

Rock channel protection shall be in compliance with the State of Ohio Department of Transportation Construction and Material Specifications Item 601.08 when required by the County Engineer.

SECTION 819 STORM SEWER CONSTRUCTION SPECIFICATIONS FOR EXCAVATION

A. GENERAL

1. The contractor shall do all excavation of whatever substances encountered to depth shown on plans. Excavated materials not required for fill or backfill shall be removed from the site as directed by the engineer.

2. Excavation for manholes and other accessories shall have twelve (12) inch minimum and twenty four (24) inch maximum clearance on all sides.

3. Excavation shall not be carried below the required level. Required level is determined by adding thickness of pipe wall to invert cut.

4. Excess excavation below required level shall be back-filled with sand, washed gravel or concrete, as directed by the County Engineer, and thoroughly mechanically tamped.

5. Ground adjacent to all excavation shall be graded to prevent water running into the excavation.

6. The contractor shall remove , by pumping or other means approved by the County Engineer, any water accumulated in the excavation. Pumping sumps shall be excavated outside the trench and trenches kept dry for laying pipe or placing concrete.

B. TRENCH EXAMINATION

Banks of trenches shall be vertical unless otherwise specified by the Engineer, and work procedures shall meet Occupational, Safety and Health Act (OSHA) Standards. It shall be the responsibility of the developer to insure that all trenches and/or open excavations are sufficiently identified and barricaded to insure the safety of the general public.

C. WIDTH OF TRENCHES

1. Trenches shall be six (6) inches minimum on each side of pipe bell.

2. In rock, excavation shall be carried to a depth of one fourth (1/4) the diameter of the pipe but in no case less than four (4) inches below the bottom of the pipe.

3. In soft trench bottoms, granular bedding shall then be uniformly spread in the trench bed to assure a uniformly stable support for the pipe.

D. BRACING AND SHORING

The contractor shall do all bracing and shoring necessary to perform and protect all excavations as indicated on plans or outlined in specifications as required for safety to conform with governing laws and regulations (i.e.. OHSA).

E. TEMPORARY BRIDGES

Temporary bridges or crossings shall be built by the contractor where required to maintain traffic and shall be approved by the County Engineer.

F. BACKFILLING

1. Pipe backfill shall be placed evenly and carefully around and over pipe with #310 (I-22) crushed run gravel and shall be thoroughly and carefully compacted in road right-of-way immediately after being inspected.

2. Backfill outside right-of-way limits may be backfilled with excavated material but must be free from lumber or debris and carefully compacted.

3. Backfilling manholes and catch basins, requirements will be the same as pipe backfill.

SECTION 820 CURB AND GUTTER AND SIDEWALKS

Line and grade for all curb and gutter construction shall be set under the direction of the developer's engineer. The contractor shall work from said lines and grades as furnished by the engineer and shall be responsible for protecting stakes and other markers as set.

The curb and gutter shall be constructed to exact line and grade before the flexible pavement is placed.

Steel forms shall be required to form the front and back of the combined curb and gutter.

Curb sections shall be a maximum of ten (10) feet in length. One half (1/2) inch premoled expansion joints shall be spaced thirty (30) feet apart but will not be required where full depth templates provide one eighth (1/8) separation of the ten (10) foot sections.

Curbs shall be formed to the cross-section as shown on the drawings with a mule or templates supported on the side forms.

All concrete shall be spaced thoroughly to insure contact with forms at all points and to eliminate honeycomb.

Concrete shall be given a reasonable smooth uniform flat finish or broom finish, all edges rounded. Gutter line shall be true to grade unobstructed by expansion material or uneven construction joints. All excavations for curb and gutter shall be made to allow for a minimum of three (3) inches of 304 aggregate to be placed and compacted prior to setting forms. (See typical street cross-section detail.) Where fill is necessary to obtain proper sub-grade, crushed material shall be used for said fill, thoroughly tamped and compacted. All excavations shall be maintained in a dry condition prior to placing of concrete. Water and mud shall be removed from all forms and dry material placed to assure a dry trench.

The contractor shall at all times provide protection against weather, rain, wind, storms, frost and heat so as to maintain all work and materials free from injury or damage.

All utility trenches crossing the line of curb and gutter shall be thoroughly compacted and tamped to provide proper settlement prior to placing of concrete. In addition, a minimum of three (3) five-eights (5/8) inch reinforcing rods shall be equally spaced two (2) inches clear from the bottom of the curb adequately spanning the utility trench to eliminate future settlement of the curb and gutter.

Where the contractor is performing work on or near the traveled portion of the highway, he shall provide and maintain guard lights and barricades to protect the public from obstructions, trenches, excavations, or other obstacles brought about by his construction.

Concrete shall be Class "B" according to State of Ohio Highway Specifications:

Dry Aggregates Cement Content Net water content

Type of Coarse lbs. per sack per cubic yard gal. per sack

Aggregate (94lb)of cement of concrete,sacks minimum

Fine Coarse Total

Agg. Agg.

Gravel 265 195 400 6.75 5.0

Limestone 285 175 460 6.75 5.0

Slag 300 140 440 6.75 5.0

Concrete shall have a minimum of six (6) percent air entrapment. Preparation and curing of concrete shall be in accordance with Item 499 of the State of Ohio Highway Specifications. Excavated areas adjacent to face and back of curb and gutter shall be backfilled as soon as practical after removal of forms to assure maintenance of proper line and grade.

RECOMMENDED CURB

A. Concrete combine curb and gutter - 21 inch chairback type. (See drawings type a combined and type b integral.)

B. Alternate - (When preferred and approved by the township in which the development occurs) Concrete combined curb and gutter - 30 inch roll type. (See drawing type C.)

C. All sidewalks shall be constructed to Class "B" portland cement concrete to the minimum width specified in Section 506-509 and a minimum depth of four (4) inches. Back of sidewalk shall be placed six (6) inches inside street right-of-way to allow for placement of property pins.

SECTION 821 CURB CUTS

Curb cuts shall be required at all driveways at the discretion of the appropriate township trustees. The location of curb cuts shall be determined at the time zoning certificates are obtained and inspection shall be performed by the appropriate township.

Where sidewalks are constructed, four (4) foot curb cuts may be required at intersections to facilitate movement of wheelchairs.

SECTION 822 WATER SUPPLY IMPROVEMENTS

The following shall govern water supply improvements:

A. Public Water Supply: Where public water supply is within reasonable distance, as determined by the County Sanitary Engineer, the RPCC shall require and the subdivider or developer shall construct a system of water mains ad appurtenances and connect them with such public water supply and provide a connection for each lot.

B. Where a public water system is not accessible, but the development is within the boundaries of a Water Service Planning Area as officially designated by the Board of County Commissioners of Greene County, Ohio, and supported by a potential water supply problem reported by the Greene County Health Department, the subdivider or developer shall construct a system of water mains and appurtenances and provide a connection for each lot and, in addition, provide individual wells for each lot in the development.

C. Where a development is not within the boundaries of a Water Service Planning Area as officially designated by the Board of County Commissioners of Greene County, Ohio, but is within a reasonable distance of municipal or other public water supply, even if not presently accessible as determined by the County Sanitary Engineer and the Greene County Health Department, the subdivider or developer shall construct a system of water mains and appurtenances and provide a connection for each lot and, in addition, provide individual wells for each lot in the development.

D. Where public water supply is not available and the development to be served is not covered under Section 822A, B, or C, the subdivider or developer or builder shall provide for individual wells for each lot within the subdivision.

E. TEST WELLS

In areas where a public water supply is not available, and prior to approval of the preliminary design plan, test wells shall be installed, tested, and data reported to the Greene County Health Department in accordance with the Section 4 of the Greene County Health Department Subdivision Regulations and the standard criteria of the American Water Works Association.

Test wells shall be at least twenty five (25) feet in depth and shall produce safe potable drinking water at a rate of not less than five (5) gallons per minute for a period of not less than six (6) continuous hours of pumping.

The well log in three (3) copies will include the name and addresses of the well driller and shall be submitted with the plat to the RPCC and shall include the following:

1. Depth of well and casting.

2. Geologic horizon from which ground water is obtained.

3. Draw down.

4. Recovery rate.

5. Developed capacity in gallons per minute.

F. LOCATION AND CONSTRUCTION OF INDIVIDUAL PRIVATE WELLS

Individual private wells shall be located in accordance with the rules of the State of Ohio Private Water Systems Rules. The minimum distance between a water source and common sources of contamination shall be as follows:

Sewer and drain-watertight pipe 10'

Underground fuel oil or gasoline storage tanks 50'

Sewage tanks 50'

Sewage absorption fields 50'

Leaching pit or dry well 100'

Vault privies 50'

Stables, manure piles, etc. 50'

Leaching privies 100'

Streams, lakes, ponds, ditches 25'

Other known sources of contamination 50'

The minimum distances between a water source and other non-contamination sources are as follows:

Foundation of an occupied dwelling 10'

Lot lines 05'

Road right-of-way 15'

Road surface (whichever is greater) 25'

All abandoned wells shall be sealed in a manner prescribed by the Greene County Health Department.

In all cases where it has been determined that an adequate quantity of safe potable water cannot be obtained from individual wells, a temporary public water distribution system will be required if water is available for such purposes as determined by the Greene County Sanitary Engineer and/or the Ohio Environmental Protection Agency.

G. PUBLIC WATER DISTRIBUTION SYSTEMS

Public water systems (as defined in Public Law 93-523, the Safe Drinking Water Act) shall be developed in compliance with the requirements of the United States Environmental Protection Agency (E.P.A.), the State of Ohio E.P.A., the State of Ohio Department of Health (and its agent, the Greene County Health Department and the Greene County Sanitary Engineering Department.

Private wells and other water distribution systems may be accepted for maintenance and operation by the Greene County Sanitary Engineer if the ownership is vested to Greene County and if the water distribution system has been constructed according to specifications and if it has been approved by the Sanitary Engineer.

SECTION 823 FIRE PROTECTION

Fire hydrants conforming to the materials and installation standards of the Greene County Sanitary Engineering Department with two and one half)2-1/2) inch diameter hose connections and four and one half (4-1/2) inch diameter pumping connections shall be provided by the subdivider in all subdivisions where the installation of water mains is required. The hydrants shall be located on common property lines and behind curbs with the pumper connection facing and the hose connection parallel to the street. Hydrants shall be placed at each street intersection and at mid-block for blocks under eight hundred (800) feet in length, but over four hundred (400), and as otherwise recommended by the National Fire Protection Association but in not case shall hydrants be spaced more than four hundred (400) feet apart. Hydrants shall also be required at the entrance and end of all cul-de-sacs less than four hundred (400) feet in length and not having circulating water lines. Additional fire hydrants may be required in accordance with the National Board of Fire Underwriters "Standards Schedule for Grading Cities and Towns of the United States with Reference to Their Fire Defenses and Physical Conditions."

The type of hydrant and control valves and the location of the hydrant shall be approved by the Sanitary Engineer. The minimum size of any water line serving any hydrant shall not be less than six (6) inches in diameter and should be circulating water lines. The size and location of water lines shall be approved by the Sanitary Engineer and the Ohio Inspection Bureau for commercial and industrial subdivisions.

SECTION 824 SANITARY SEWER IMPROVEMENTS

The following requirements shall govern sanitary sewer improvements:

A. Where an adequate existing public wastewater treatment system is reasonably accessible, in the determination of the RPCC, public sanitary sewers shall be installed to adequately serve all lots, including lateral connections to the public system. Public sewer system extensions shall meet the requirements of the Ohio Environmental Protection Agency and county standards. Combinations of sanitary sewers and storm sewers shall be prohibited.

B. Where a public wastewater treatment system is not reasonably accessible, the subdivider may provide:

1. A central public wastewater treatment system, including a collection system and wastewater treatment facility, for the group, provided that the general plan for such a treatment system has received the prior approval of the Ohio E.P.A., Greene County Health Department and Greene County Sanitary Engineering Department

and that, after said approval, the system is constructed and installed in accordance with the requirements of these agencies; or

2. Lots may be served by individual disposal systems if the provisions of Section 825 C are met.

C. 1. Where the installation of individual disposal systems is considered, the suitability of the soil for individual systems the absorptive ability of the soil, surface drainage, ground water level, and topography shall be the criteria for determining whether or not the installation of individual systems is permissible. Criteria shall be in accordance with the requirements of the Greene County Combined General Health District and the requirements of the Ohio Environmental Protection Agency.

2. Each lot so served shall be of a size and shape to accommodate the necessary length of title field at a lower elevation than the proposed building(s). Such lot size and shape shall conform to the requirements of the zoning district in which they are located.

3. Soil survey maps and field investigations shall be utilized to determine the major soil types within the area being platted. The combined information shall be the basis for determining the suitability of onsite disposal systems.

Other tests may be utilized provided they are acceptable to the Ohio Environmental Protection Agency and the Greene County Combined Health District.

SECTION 825 ELECTRIC, GAS, AND TELEPHONE IMPROVEMENTS

A. Electric service and telephone service shall be provided within each subdivision. Gas service may be required where reasonable accessible. Whenever such facilities are reasonably accessible and available, they may be required to be installed within the area prior to the approval of the final plat. Telephone, electric, and street lighting wires, conduits and cables may be required to be constructed underground.

B. Overhead utility lines, where feasible, shall be located at the rear of all lots. The width of the easement per lot shall not be less than five (5) feet and the total easement width shall not be less than ten (10) feet.

SECTION 826 OVER-SIZE AND OFF-SITE IMPROVEMENTS

The utilities, pavements, and other land improvements required for the proposed subdivision shall be designed of over-size and/or with extensions provided to serve nearby land which is an integral part of the neighborhood service or drainage area as determined by the County Engineer and/or Sanitary Engineer.

SECTION 827 COST OF OVER-SIZE IMPROVEMENTS

The subdivider shall be required to pay for only that part of the construction costs of major arterial streets as determined by the County Engineer. For storm drainage systems within the County, the County shall pay the difference between the cost of forty eight (48) inch pipe and any larger sized pipe only when it is required to service the drainage area beyond the limits of the plat. The subdivider shall be required to pay for all other over-size improvements that pertain to sanitary sewers and water lines and storm drainage requirements inherent to the plat and shall not be required to pay for oversize sanitary sewer and/or water line improvements where such oversizing has been required for conformance with conceptual Sanitary Sewer and Water Master Plan for Greene County.

SECTION 828 EXTENSIONS TO BOUNDARIES

The subdivider may be required to extend the necessary improvements to the boundary of the proposed subdivision to serve adjoining unsubdivided land as determined by the RPCC.

SECTION 829 OFF-SITE EXTENSIONS

If streets or utilities are not available at the boundary of the proposed subdivision and if the RPCC finds the extension across undeveloped areas would not be warranted as a special assessment to the intervening properties or as a county expense until some future time, the subdivider may be required, prior to approval of the final plat, to obtain necessary easements or right-of-way and construct and pay for such extensions. Such improvements shall be available for connections by subdividers of adjoining land.

ARTICLE 9

REVISIONS, ENFORCEMENT

SECTION 901 RECORDING OF PLAT

No plat of any subdivision shall be recorded by the County Recorder of Greene County or have any validity until said plat has received final approval in the manner prescribed in these regulations. No final plat shall be recorded after sixty (60) days of its approval.

Recording of a plat of a Cemetery - All proposed cemeteries must be recorded in accord with the Ohio Revised Code, Chapter 1721 and these regulations. However, due to the nature of a cemetery the developer may submit the proposed cemetery to the RPCC under Section 106 for a ruling. The subsequent submission must then follow the direction of the RPCC ruling.

SECTION 902 REVISION OF PLAT AFTER APPROVAL

No changes, erasures, modifications, or revision shall be made in any plat of a subdivision after approval has been given by the RPCC and endorsed in writing on the plat, unless said plat is first resubmitted to the RPCC. Any proposed change to any approved and recorded subdivision must meet the designated requirements as provided in Section 711.01 to 711.38, inclusive, of the Ohio Revised Code and be approved by the RPCC for replatting.

SECTION 903 SALE OF LAND WITHIN SUBDIVISIONS

No owner or agent of the owner of any land located within a subdivision shall transfer or sell any land by reference to, exhibition of, or by the use of a plat of the subdivision before such plat has been approved and recorded in the manner prescribed by these regulations. The description of such lot or parcel by metes and bounds in the instrument of transfer or other documents used in the process of selling or transferring shall not exempt the transaction from the provisions of these regulations.

SECTION 904 SCHEDULE OF FEES, CHARGES, AND EXPENSES

The Board of County Commissioners of Greene County shall establish a schedule of fees, charges, expenses, and collection procedure for same and other matters pertaining to these regulations. The schedule of fees shall be posted in the office of the RPCC. Until all applicable fees, charges and expenses have been paid in full, not action shall be taken on any application or appeal.

SECTION 905 PENALTIES

The following penalties shall apply to the violations of these regulations:

A. Whoever violates any rule or regulation adopted by the Board of County Commissioners for the purpose of setting standards and requiring and securing the construction of improvements within a subdivision or fails to comply with any order pursuant thereto is creating a public nuisance and the creation thereof may be enjoined and maintenance thereof may be abated by action at suit of the County or any citizen thereof. Whoever violates these regulations shall forfeit and pay not less than one hundred ($100.00) dollars nor more than one thousand (1,000.00) dollars. Each day may constitute a separate offense. Such sum may be recovered with costs in a civil action suit brought in the Court of Common Pleas of Greene County.

B. A County Recorder who records a plat contrary to the provision of these regulations shall forfeit and pay not less than one hundred ($100.00) dollars nor more than five hundred ($500.00) dollars, to be recovered with costs in a civil action suit by the Prosecuting Attorney in the name and for the use of Greene County.

C. Whoever, being the owner or agent of the owner of any land within or without a municipal corporation, transfers any lot, parcel or tract of such land from or in accordance with a plat of a subdivision before such plat has been recorded in the office of the County Recorder, shall forfeit and pay the sum of not less than one hundred ($100.00) dollars nor more than five hundred ($500.00) dollars for each lot, parcel, or tract by mets and bounds in the deed or transfer shall not serve to exempt the seller from the forfeiture provided in this section.

D. Any person who disposes of, offers for sale or lease for a time exceeding five (5) years any lot or any part of a lot in a subdivision before provisions of these regulations are complied with shall forfeit and pay the sum of not less than one hundred ($100.00) dollars nor more than five hundred ($500.00) dollars for each lot or part of a lot so sold, offered for sale or lease, to be recovered with costs in a civil action, by the Prosecuting Attorney in the name and for the use of Greene County.

SECTION 906 VARIANCES

The following regulations shall govern the granting of variances:

A. Where the RPCC finds that extraordinary and unnecessary hardship may result from strict compliance with these regulations, due to exceptional topographic or other physical conditions, it may vary the regulations so as to relieve such hardship, provided such relief may be granted without detriment to the public interest and without impairing the intent and purpose of these regulations or the desirable development of the neighborhood and community. Such variations shall not have the effect of nullifying the intent and purpose of these regulations, the comprehensive plan, or the zoning ordinance (resolution) if such exists.

B. In granting variance or modifications, the RPCC may require such conditions as will, in its judgment, secure substantially the objective of the standards or requirements so varied or modified.

C. Estate Developments: Any development where the minimum road frontage is in excess of one hundred fifty (150) feet on a public road and the total are of the smallest lot is in excess of 43,560 square feet. The developer of an estate development may request a variance from the standard road specifications from the County Engineer and the RPCC. When it has been determined that the public health, safety or general welfare will not be endangered, and soil conditions, topographic features, etc., will permit, the standard road specifications for a subdivision in Greene County may be altered. When the variance is granted by the County Engineer and the RPCC to a developer in regard to road standards, the plat of record shall prohibit any further division of lots as platted unless first approved by the RPCC.

SECTION 907 APPEAL

Any person who believes he has been aggrieved by the regulations or the actions of the RPCC has all rights to appeal as set forth in Chapter 711 of the Ohio Revised Code or any other applicable section of the Ohio Revised Code.

ARTICLE 10

ENACTMENT

SECTION 1001 EFFECTIVE DATE

These regulations as amended shall become effective from and after the date of their approval and adoption by the Regional Planning and Coordinating Commission of Greene County and the Board of County Commissioners after public hearings and certification to the Greene County Recorder. Henceforth, any other regulations previously adopted by the Board of County Commissioners shall be deemed to be replaced. These regulations shall in no way affect any subdivision having received final approval prior to the effective date provided, however, that no changes to the preliminary plat as approved are introduced by the subdivider.

PASSED:

April 27, 1982

Regional Planning and Coordinating Commission of Greene County

August 24, 1982

Board of County Commissioners - Resolution Number 82-8-24-9

TYPICAL ROAD SECTION
"RESIDENTIAL or LOCAL"
NO SCALE

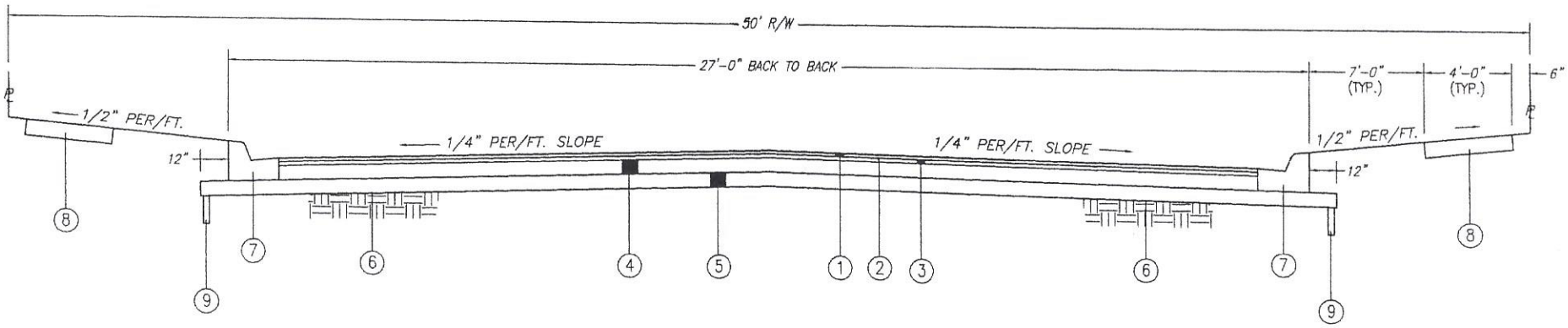

LEGEND

1. ITEM 448 ~ 1-1/2" ASPHALT CONCRETE SURFACE COURSE, TYPE 1
2. ITEM 407 ~ TACK COAT (0.10 GAL./S.Y.)
3. ITEM 448 ~ 1-1/2" ASPHALT CONCRETE LEVELING COURSE, TYPE 2
4. ITEM 301 ~ 4" ASPHALT CONCRETE BASE
5. ITEM 304 ~ 4" AGGREGATE BASE
6. ITEM 204 ~ SUBGRADE COMPACTION
7. ITEM 609 ~ COMBINATION CURB & GUTTER, AS PER GREENE COUNTY REQUIREMENTS
8. ITEM 608 ~ 4' CONCRETE WALK (4" THICK)
9. ITEM 605 ~ 1"x12" ADVANEDGE, FABRIC WRAPPED, ENCASED IN #57 STONE

DESIGN BY SOIL CLASSIFICATION, DRAINAGE LAYER DESIGN

	A	B	C	D
ITEM 304	4"	4"	4"	4"
ITEM 301	4"	4"	4"	4 1/4"
ITEM 448	1 1/2"	1 1/2"	1 1/2"	1 1/2"
ITEM 448	1 1/2"	1 1/2"	1 1/2"	1 1/2"

TYPICAL ROAD SECTION
"ARTERIAL"
NO SCALE

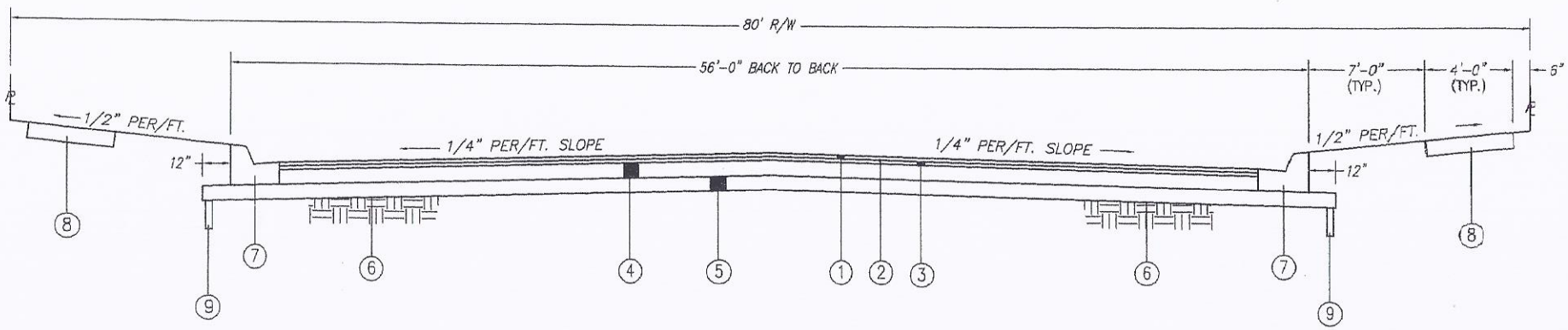

LEGEND

1. ITEM 448 ~ 1-1/2" ASPHALT CONCRETE SURFACE COURSE, TYPE 1
2. ITEM 407 ~ TACK COAT (0.10 GAL./S.Y.)
3. ITEM 448 ~ 1-1/2" ASPHALT CONCRETE LEVELING COURSE, TYPE 2
4. ITEM 301 ~ 4" ASPHALT CONCRETE BASE
5. ITEM 304 ~ 4" AGGREGATE BASE
6. ITEM 204 ~ SUBGRADE COMPACTION
7. ITEM 609 ~ COMBINATION CURB & GUTTER, AS PER GREENE COUNTY REQUIREMENTS
8. ITEM 608 ~ 4' CONCRETE WALK (4" THICK)
9. ITEM 605 ~ 1"x12" ADVANEDGE, FABRIC WRAPPED, ENCASED IN #57 STONE

DESIGN BY SOIL CLASSIFICATION, DRAINAGE LAYER DESIGN

	A	B	C	D
ITEM 304	6"	6"	6"	6"
ITEM 301	4"	4"	4"	4"
ITEM 301	3"	3"	3"	3 1/2"
ITEM 448	2"	2"	2"	2"
ITEM 448	1 1/2"	1 1/2"	1 1/2"	1 1/2"

TYPICAL ROAD SECTION
"COLLECTOR"
NO SCALE

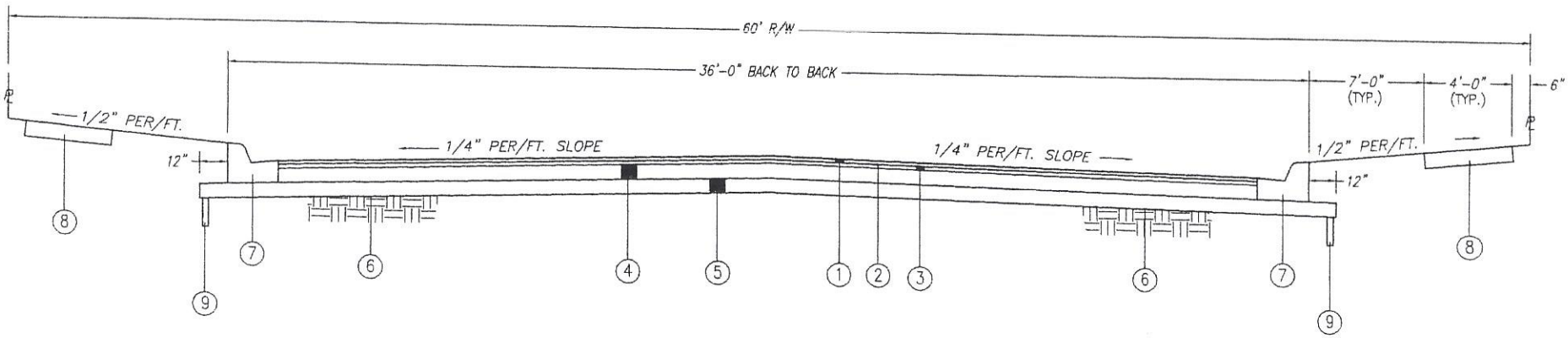

LEGEND

1. ITEM 448 ~ 1-1/2" ASPHALT CONCRETE SURFACE COURSE, TYPE 1
2. ITEM 407 ~ TACK COAT (0.10 GAL./S.Y.)
3. ITEM 448 ~ 1-1/2" ASPHALT CONCRETE LEVELING COURSE, TYPE 2
4. ITEM 301 ~ 4" ASPHALT CONCRETE BASE
5. ITEM 304 ~ 4" AGGREGATE BASE
6. ITEM 204 ~ SUBGRADE COMPACTION
7. ITEM 609 ~ COMBINATION CURB & GUTTER, AS PER GREENE COUNTY REQUIREMENTS
8. ITEM 608 ~ 4' CONCRETE WALK (4" THICK)
9. ITEM 605 ~ 1"x12" ADVANEDGE, FABRIC WRAPPED, ENCASED IN #57 STONE

DESIGN BY SOIL CLASSIFICATION, DRAINAGE LAYER DESIGN

	A	B	C	D
ITEM 304	4"	4"	4"	4"
ITEM 301	3"	3"	3"	4"
ITEM 301	3 3/4"	3 3/4"	3 3/4"	4"
ITEM 448	1 1/2"	1 1/2"	1 1/2"	1 1/2"
ITEM 448	1 1/2"	1 1/2"	1 1/2"	1 1/2"

TYPICAL ROAD SECTION
"ESTATE STREET"
NO SCALE

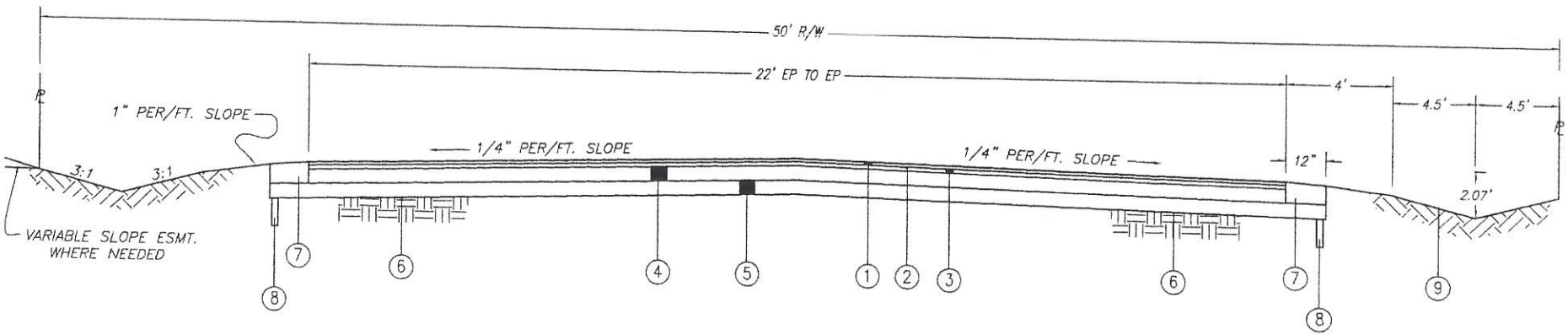

LEGEND

1. ITEM 448 ~ 1-1/2" ASPHALT CONCRETE SURFACE COURSE, TYPE 1
2. ITEM 407 ~ TACK COAT (0.10 GAL./S.Y.)
3. ITEM 448 ~ 1-1/2" ASPHALT CONCRETE LEVELING COURSE, TYPE 2
4. ITEM 301 ~ 4" ASPHALT CONCRETE BASE
5. ITEM 304 ~ 4" AGGREGATE BASE
6. ITEM 204 ~ SUBGRADE COMPACTION
7. ITEM 411 or 304 ~ 12" WIDE GRAVEL BERM
8. ITEM 605 ~ 1"x12" ADVANEDGE, FABRIC WRAPPED, ENCASED IN #57 STONE
9. SEED, SOD OR JUTE MATTING

DESIGN BY SOIL CLASSIFICATION, DRAINAGE LAYER DESIGN

	A	B	C	D
ITEM 304	4"	4"	4"	4"
ITEM 301	4"	4"	4"	4 1/4"
ITEM 448	1 1/2"	1 1/2"	1 1/2"	1 1/2"
ITEM 448	1 1/2"	1 1/2"	1 1/2"	1 1/2"