# Regulations and Specifications of the Greene County Sanitary Engineering Department

The following Regulations and Specifications are for the information and guidance of all users and potential users of the sanitary sewer and water supply facilities of the Greater Greene-Little Miami Sewer District and the solid waste disposal facilities of the Greene County Garbage and Refuse Disposal District as provided by the Board of County Commissioners, Greene County, Ohio, through its agent, the Greene County Sanitary Engineering Department.

These Regulations and Specifications are established under the authority of Sections 6103.02, 6117.01 and 343.01 of the Ohio Revised Code and revisions were approved by the Board of County Commissioners on May 9, 2006.

# Regulations and Specifications
# Greene County, Ohio
# Part A-Regulations

## TABLE OF CONTENTS


**SECTION DESCRIPTION.....PAGE NO.**

**1*DEFINITIONS** ..... **A-1-1**

1.01*COUNTY ..... A-1-1

1.02*COUNTY COMMISSION ..... A-1-1

1.03*SANITARY ENGINEER ..... A-1-1

1.04*SPECIFICATIONS ..... A-1-1

1.05*INSPECTOR ..... A-1-1

1.06*EASEMENT ..... A-1-1

1.07*PERMIT ..... A-1-1

1.08*WATER SERVICE ..... A-1-1

1.09*WATER SERVICE CONNECTION ..... A-1-1

1.10*SANITARY SEWER ..... A-1-1

1.11*STORM SEWER ..... A-1-1

1.12*BUILDING DRAIN – SANITARY ..... A-1-1

1.13*BUILDING SEWER - SANITARY ..... A-1-1

1.14*SANITARY SEWAGE ..... A-1-2

1.15*INDUSTRIAL AND COMMERCIAL WASTES ..... A-1-2

1.16*SEWERAGE WORKS ..... A-1-2

1.17*WASTEWATER TREATMENT PLANT ..... A-1-2

1.18*GARBAGE ..... A-1-2

1.19*PROPERLY SHREDDED GARBAGE ..... A-1-2

1.20*SUSPENDED SOLIDS ..... A-1-2

1.21*SLUG ..... A-1-2

1.22*WATERCOURSE ..... A-1-2

1.23*NATURAL OUTLET ..... A-1-2

1.24*COOLING WATER ..... A-1-2

1.25*DEDUCT METER ..... A-1-2

1.26*HOSE BIB ..... A-1-2

**SECTION DESCRIPTION……PAGE NO.**


**2*GENERAL CONDITIONS**.....A-2-1

2.01*AUTHORITY.....A-2-1

2.02*OWNERSHIP AND CONTROL.....A-2-1

2.03*EFFECTIVE DATE.....A-2-1

2.04*VALIDITY.....A-2-1

2.05*ENFORCEMENT.....A-2-1

2.06*VIOLATION.....A-2-1

2.07*PENALTIES.....A-2-1

2.08*JURISDICTION.....A-2-2

2.09*AGREEMENT.....A-2-2

2.10*INTERPRETATION.....A-2-2

2.11*PERSONNEL.....A-2-2

**3*WATER SYSTEM**.....A-3-1

3.01*GENERAL.....A-3-1 thru A-3-2

3.02*WATER METERS.....A-3-2

3.03*METER BY-PASSES.....A-3-3

3.04*SERVICE PER RESIDENCE AND METER PIT REQUIREMENTS.....A-3-3

3.05*METER TESTING.....A-3-3

3.06*FIRE SERVICE.....A-3-3

3.07*BILLING METHODS AND PROCEDURES.....A-3-4

3.08*REPAIR AND MAINTENANCE.....A-3-5

3.09*TAMPERING WITH THE SYSTEM.....A-3-5

3.10*GUARANTEE OF SUPPLY.....A-3-6

3.11*GUARANTEE OF SERVICE.....A-3-6

3.12*CONSTRUCTION WATER.....A-3-6

3.13*REQUEST FOR INSPECTION.....A-3-6

3.14*SPECIAL WATER METERS.....A-3-6

3.15*WATER/SEWER BILL ADJUSTMENT POLICY.....A-3-7

**CROSS CONNECTION CONTROL**.....A-3-8

3.301*GENERAL POLICY.....A-3-8

3.302*DEFINITIONS.....A-3-8 thru A-3-10

3.303*WATER SYSTEM.....A-3-11

3.304*CROSS CONNECTIONS PROHIBITED.....A-3-11

3.305*SURVEY AND INVESTIGATIONS.....A-3-11

**SECTION DESCRIPTION.....PAGE NO.**


3.306*WHERE PROTECTION IS REQUIRED ..... A-3-11

3.307*TYPE OF PROTECTION REQUIRED ..... A-3-12

3.308*BACKFLOW PREVENTION DEVICES ..... A-3-13

3.309*INSTALLATION ..... A-3-14

3.310*INSPECTION AND MAINTENANCE ..... A-3-14

3.311*BOOSTER PUMPS ..... A-3-15

3.312*VIOLATIONS ..... A-3-15

**4*SANITARY SEWER SYSTEM** ..... A-4-1

4.01*WASTE TO BE DISCHARGED IN SANITARY ..... A-4-1

4.02*PROHIBITED WASTES ..... A-4-1

4.03*JUDGMENT OF WASTE QUALITY ..... A-4-2

4.04*SPECIAL APPURTENANCES ..... A-4-3

4.05*TESTING ..... A-4-3

4.06*BILLING METHODS AND PROCEDURES ..... A-4-4

4.07*TAMPERING WITH THE SYSTEM ..... A-4-5

4.08*DISPOSAL OF SEPTIC TANK AND HOLDING TANK WASTES ..... A-4-5

4.09*REPAIRS AND MAINTENANCE ..... A-4-6

*GREENE COUNTY BEAVERCREEK WATEWATER TREATMENT FACILITY WASTE CERTIFICATE OF ORIGIN....A-4-7

**INDUSTRIAL PRETREATMENT PROGRAM** ..... A-4-8

4.310*GENERAL PROVISIONS ..... A-4-8

4.311*PURPOSE AND POLICY ..... A-4-8

4.320*DEFINITIONS ..... A-4-8 thru A-4-10

4.325*DISCHARGE PERMITS ..... A-4-10

4.330*REGULATIONS ..... A-4-11

4.331*GENERAL DISCHARGE PROHIBITIONS ..... A-4-11

4.332*LIMITATIONS ON WASTEWATER STRENGTH ..... A-4-12

4.332.1*NATIONAL CATEGORICAL PRETREATMENT STANDARDS ..... A-4-12

4.332.2*RIGHT OF REVISION ..... A-4-12

4.332.3*DILUTION ..... A-4-12

4.332.4*SIGNIFICATE-NON COMPLIANCE ..... A-4-12

4.332.5*CHANGES, CHARACTERISTICS OR VOLUME OF WASTES ..... A-4-13

4.333*ACCIDENTAL DISCHARGES ..... A-4-13

4.340*FEES ..... A-4-13

4.341*PURPOSE ..... A-4-13

**SECTION DESCRIPTION……PAGE NO.**


4.342*CHARGES AND FEES....A-4-14

4.350*ADMINISTRATION....A-4-14

4.351*WASTEWATER DISCHARGERS....A-4-14

4.352*WASTEWATER DISCHARGE DATA DISCLOSURE....A-4-14

4.352.1*GENERAL DISCLOSURE....A-4-14

4.352.2*DISCLOSURE FORMS.... A-4-14 thru A-4-15

4.352.3*STANDARDS MODIFICATION....A-4-16

4.353*REPORTING REQUIREMENTS FOR DISCHARGER....A-4-16

4.353.1*COMPLIANCE DATE REPORT....A-4-16

4.353.2*PERIODIC COMPLIANCE REPORTS....A-4-16

4.354*MONTORING FACILITIES....A-4-17

4.355*INSPECTION AND SAMPLING....A-4-17

4.356*CONFIDENTIAL INFORMATION....A-4-17

4.360*ENFORCEMENT....A-4-18

4.361*ENFORCEMENT ACTIONS....A-4-18

4.362*NOTICE OF VIOLATION....A-4-18

4.363*ADMINISTRATIVE COMPLIANCE ORDER....A-4-18

4.364* SHOW CAUSE ORDER....A-4-18

4.365*EMERGENCY SUSPENSION OF SERVICE – CEASE AND DESIST ORDER....A-4-18

4.366*TERMINATION OF TREATMENT SERVICE....A-4-19

4.367*JUDICIAL PROCEEDINGS....A-4-19

4.368*RIGHT OF APPEAL....A-4-19

4.370*PENALTIES....A-4-19

4.371A*CIVIL PENALTIES....A-4-19

4.371B*ADMINISTRATIVE PENALTIES....A-4-19

4.372*RECOVERY OF COSTS INCURRED BY THE BOARD....A-4-20

4.373*FALSIFYING INFORMATION....A-4-20

4.38*RECORDS RETENTION....A-4-20

4.390*SEVERABILITY....A-4-20

*Application To Discharge Industrial Wastewater To Greene County Publicly Owned Treatment Works . A-4-21

*Greene County Industrial Pretreatment Program Discharger Disclosure Form.... A-4-22 thru A-4-25

*Public Sewer Discharge Information .... A-4-26 thru A-4-29

**SECTION DESCRIPTION……PAGE NO.**

**5*PROCEDURES AND PERMITS**.....A-5-1

5.01*PERMITS.....A-5-1

5.02*CONSTRUCTION..... A-5-1 thru A-5-2

**6*DEVELOPMENT PROCEDURES**.....A-6-1

6.01*SANITARY SEWER AND WATER SERVICE REQUEST .....A-6-1

6.02*BONDS, BOND RELEASE REQUIREMENTS AND OVERSIZE REIMBURSEMENT .....A-6-2

6.03*CONSTRUCTION PLANS - PHYSICAL FORMAT..... A-6-3 thru A-6-5

6.04*CONSTRUCTION PLANS – SPECIFICATIONS .....A-6-5

6.05*CONSTRUCTION PLANS - REVISIONS TO APPROVED PLANS.....A-6-5

6.06*CONSTRUCTION PLANS - APPROVAL PERIOD.....A-6-5

6.07*CONSTRUCTION PLANS - “AS-BUILT” DRAWINGS .....A-6-6

6.08*CONSTRUCTION PLANS - PROCEDURE ON “AS-BUILT” DRAWINGS .....A-6-7

# Regulations and Specifications
# Greene County, Ohio
# Part B-Regulations

## TABLE OF CONTENTS

**SECTION DESCRIPTION……PAGE NO.**


**CONSTUCTION MATERIALS** ..... B-1-1

**1*GENERAL** ..... B-1-1

1.1*STANDARDS ..... B-1-1

1.2*INSPECTION AND TESTING ..... B-1-1

1.3*SAMPLES ..... B-1-1

**2*PRESSURE PIPE** ..... B-2-1

2.1*DUCTILE IRON ..... B-2-1

2.1.1*JOINTS ..... B-2-1

2.1.2*FITTINGS ..... B-2-1

2.1.3*COATING FOR DUCTILE ITON PIPE AND FITTINGS ..... B-2-1

2.1.4*ANCHORING ASSEMBLIES ..... B-2-2

2.2*REINFORCED CONCRETE ..... B-2-2

2.3*PRESSURE SERVICE LINES ..... B-2-3

2.3.1*GENERAL ..... B-2-3

2.3.2*SERVICE PIPE ..... B-2-3

2.3.3*CORPORATION STOPS ..... B-2-3

2.3.4*SERVICE STOPS (CURB STOPS) ..... B-2-3

2.3.5*METER PIT ..... B-2-3

2.3.6*METER PIT COVERS ..... B-2-3

2.3.7*METER YOKE ..... B-2-4

2.4*VALVES AND GATES ..... B-2-13

2.4.1*GENERAL ..... B-2-13

2.4.2*TYPE OF VALVE ..... B-2-13

2.4.3*VALVE BOXES ..... B-2-13

2.4.4*GATE VALVES ..... B-2-13

2.4.5*OPERATING NUTS ..... B-2-14

2.4.6*HANDWHEELS ..... B-2-14

2.4.7*HORZONTAL MOUNTING ..... B-2-14

**SECTION DESCRIPTION……PAGE NO.**


2.4.8*BYPASS VALVES..... B-2-14

2.4.9*RISING STEM VALVES..... B-2-14

2.4.10*LOW AND MEDIUM PRESSURE VALVES..... B-2-14

2.4.12*SPECIAL DETAILS..... B-2-15

2.4.13*DIRECTION OF OPENING ..... B-2-15

2.4.14*BUTTERFLY VALVES..... B-2-15

2.4.15*TAPPING SLEEVES AND TAPPING MACHINE VALVES..... B-2-16

2.4.16*CHECK VALVES..... B-2-16

2.4.17*AIR RELEASE VALVES-WATER ..... B-2-16

2.4.18*AIR AND VACUUM VALVE..... B-2-17

2.5*FIRE HYDRANTS ..... B-2-18

2.5.1*GENERAL..... B-2-18

**3*GRAVITY PIPE** ..... B-3-1

3.1*VITRIFIED CLAY PIPE ..... B-3-1

3.1.1*GENERAL..... B-3-1

3.1.2*STRENGTH ..... B-3-1

3.1.3*JOINTS..... B-3-1

3.1.4*SERIVCE CONNECTIONS..... B-3-1

3.2*NON-REINFORCED CONCRETE..... B-3-1

3.2.1*GENERAL..... B-3-1

3.2.2*STENGTH..... B-3-2

3.2.3*JOINTS..... B-3-2

3.2.4*SERVICE CONNECTIONS..... B-3-2

3.3*REINFORCED CONCRETE PIPE..... B-3-2

3.3.1*GENERAL..... B-3-2

3.3.2*JOINTS..... B-3-2

3.3.3*SERVICE CONNECTIONS..... B-3-2

3.4*PVC PIPE..... B-3-3

3.4.1*PVC D3034 SDR 35..... B-3-3

3.4.2*PIPE JOINTS..... B-3-3

3.4.3*FITTINGS ..... B-3-3

3.5*ABS/PVC..... B-3-4

3.5.1*ABS/PVC COMPOSITE SANITARY SEWER PIPE (D-2680)..... B-3-4

**SECTION DESCRIPTION.....PAGE NO.**


3.6.1*GENERAL..... B-3-5

3.6.2*CLAY PIPE..... B-3-8

3.6.3*NON-REINFORCED CONCRETE PIPE..... B-3-8

3.6.4*REINFORCED CONCRETE PIPE..... B-3-8

3.6.5*PVC - D-3034, SDR 35 ..... B-3-8

3.6.6*ABS/PVC COMPOSITE PIPE D-2680 ..... B-3-9

3.7*"SHORTS"..... B-3-9

3.7.1*GENERAL..... B-3-9

3.8*GRAVITY SERVICE LINE..... B-3-9

3.9*FLEXIBLE COUPLINGS..... B-3-9

**4*MANHOLES ..... B-4-1**

4.1*GENERAL..... B-4-1

4.2*PRECAST MANHOLE BASES..... B-4-1

4.3*PRECAST MANHOLE RISER (BARREL SECTION)..... B-4-1

4.4*PERCAST CONES..... B-4-2

4.5*FLAT SLAB MANHOLE TOPS ..... B-4-2

4.6*MANHOLE STEPS ..... B-4-2

4.7*MANHOLE FRAME AND COVERS ..... B-4-2

4.8*DROP ASSEMBLIES..... B-4-2

4.9*VENTING ASSEMBLIES ..... B-4-2

**5*TRENCH MATERIALS ..... B-5-1**

5.1*PIPE BEDDING-DESCRIPTION..... B-5-1

5.2*GRAVEL BACKFILL ..... B-5-1

5.2.1*DESCRIPTION ..... B-5-1

5.2.2*GRAVEL BACKFILL SAMPLES ..... B-5-1

5.3*CONCRETE ENCASEMENT, CRADLE AND BEDDING ..... B-5-1

5.3.1*STRENGTH ..... B-5-1

5.3.2*REINFORCING STEEL..... B-5-1

5.4*GROUT ..... B-5-1

5.4.1*FINE AGGREGATE..... B-5-1

5.4.2*COARSE AGGREGATE..... B-5-1

5.4.3*PORTLAND CEMENT ..... B-5-1

5.4.4*ADMIXTURE ..... B-5-1

**SECTION DESCRIPTION.....PAGE NO.**


5.4.5*COMPRESSIVE STRENGTH ..... B-5-1

5.5*COVER PIPE ..... B-5-1

5.5.1*GENERAL ..... B-5-1

5.5.2*STEEL PIPE ..... B-5-2

5.5.3*CORRUGATED METAL PIPE ..... B-5-2

5.5.4*TUNNEL LINER PLATES ..... B-5-2

**6*RESTORATION ..... B-6-1**

6.1*TOP SOIL ..... B-6-1

6.1.1*GENERAL ..... B-6-1

6.2*STREET ..... B-6-1

6.2.1*GENERAL ..... B-6-1

6.2.2*BASE COURSE ..... B-6-1

6.2.3*BITUMINOUS SURFACE TREATMENT ..... B-6-1

6.2.4*ASPHALTIC CONCRETE ..... B-6-1

6.3*JOINT SEALING ..... B-6-1

6.4*SOD ..... B-6-1

6.5*SEED ..... B-6-1

6.6*FERTILIZER ..... B-6-1

6.7*CONCRETE ..... B-6-1

# Regulations and Specifications
# Greene County, Ohio
# Part C-Regulations

## TABLE OF CONTENTS


**SECTION DESCRIPTION……PAGE NO.**

**1*GENERAL ..... C-1-1**

1.1*CONSTRUCTION SITE ..... C-1-1

1.2*CLIMATIC CONDITIONS ..... C-1-1

1.3*PUBLIC ACCESS ..... C-1-1

1.4*STORING OF MATERIALS ..... C-1-1

1.5*GENERAL EXCAVATION ..... C-1-1

1.6*OPEN EXCAVATION ..... C-1-1

1.7*SHEETING AND SHORING ..... C-1-1

1.8*REMOVAL OF WATER ..... C-1-2

1.9*ROCK EXCAVATION ..... C-1-2

1.10*UNSUITABLE FOUNDATION ..... C-1-2

1.11*UNAUTHORIZED EXCAVATION ..... C-1-2

1.12*REMOVAL OF EXCAVATED MATERIAL ..... C-1-2

1.13*STORAGE OF EXCAVATED MATERIAL ..... C-1-2

1.14*HANDLING PIPE ..... C-1-2

1.15*DEFECTIVE PIPE ..... C-1-3

1.16*CONCRETE ENCASEMENT AND CRADLE ..... C-1-3

1.17*INSTALLING COVER PIPE ..... C-1-3

1.17.1*GENERAL ..... C-1-3

1.17.2*INSTALLATION BY BORING ..... C-1-4

1.17.3*INSTALLATION BY JACKING ..... C-1-4

1.17.4*INSTALLATION BY TUNNELING ..... C-1-6

1.18*GENERAL RESTORATION ..... C-1-6

1.19*RESTORATION OF AGRICULTURAL LAND ..... C-1-6

1.20*TREES AND SHRUBS ..... C-1-6

1.21*GRASS PLOTS ..... C-1-7

1.22*SODDING ..... C-1-7

**SECTION DESCRIPTION……PAGE NO.**


1.23*SEEDING ..... C-1-7

1.24*STREETS, DRIVEWAYS, CURBS AND WALKS ..... C-1-7

1.24.1*GENERAL ..... C-1-7

1.24.2*REMOVAL OF EXISTING PAVEMENT ..... C-1-8

1.24.3*AGGREGATE BASE COURSE ..... C-1-8

1.24.4*SCARIFYING, GRADING, SHAPING AND COMPACTING ..... C-1-8

1.24.5*BITUMINOUS SURFACE TREATMENT ..... C-1-9

1.24.6*ASPHALTIC CONCRETE ..... C-1-9

1.24.7*CONCRETE PAVEMENT ..... C-1-9

1.24.8*CONCRETE SIDEWALKS AND CURBS ..... C-1-9

1.25*FUGITIVE DUST ..... C-1-9

1.26*EROSION AND SEDIMENT CONTROL ..... C-1-9

**2*PRESSURE PIPELINES ..... C-2-1**

2.1*TRENCH EXCAVATION ..... C-2-1

2.1.1*GENERAL ..... C-2-1

2.1.2*TRENCH DEPTH ..... C-2-1

2.2*INSTALLING PRESSURE PIPELINES ..... C-2-1

2.3*DEFLECTION OF DUCTILE IRON PIPE ..... C-2-2

2.4*REINFORCED CONCRETE PRESSURE PIPE ..... C-2-2

2.5*PIPELINE FITTINGS ..... C-2-3

2.6*TESTING ..... C-2-3

2.7*FLUSHING AND CLEANING ..... C-2-3

2.8*LEAKAGE TEST ..... C-2-3

2.9*BACKFILLING ..... C-2-4

2.10*BEDDING ..... C-2-4

2.11*INITIAL BACKFILL ..... C-2-4

2.12*BALANCE OF BACKFILL ..... C-2-7

2.13*INSTALLING GATE VALVES ..... C-2-7

2.14*INSTALLING BUTTERFLY VALVES ..... C-2-7

2.15*INSTALLING AIR RELEASE VALVES & AIR AND VACUUM VALVES ..... C-2-9

2.16*INSTALLING FIRE HYDRANTS ..... C-2-9

2.16.1*GENERAL ..... C-2-9

2.16.2*ANCHORAGE ..... C-2-10

2.17*DISINFECTION ..... C-2-10

**SECTION DESCRIPTION.....PAGE NO.**


2.18*PRESSURE SERVICE LINES (1" AND UNDER) ..... C-2-18

2.19*METER PITS ..... C-2-18

**3*GRAVITY PIPELINES ..... C-3-1**

3.1*TRENCH EXCAVATION ..... C-3-1

3.1.1*GENERAL ..... C-3-1

3.1.2*TRENCH DEPTH ..... C-3-1

3.2*INSTALLING GRAVITY PIPELINES ..... C-3-1

3.3*BEDDING ..... C-3-1

3.3.1*PIPE BEDDING ..... C-3-1

3.3.2*MANHOLE BEDDING ..... C-3-2

3.4*INITIAL BACKFILLING ..... C-3-2

3.5*BALANCE OF BACKFILL ..... C-3-3

3.6*INSTALLING MANHOLES ..... C-3-4

3.6.1*PRECAST MANHOLE BASE ..... C-3-4

3.6.2*PRECAST MANHOLE RISER AND CONE ..... C-3-4

3.6.3*MANHOLE TOPS ..... C-3-4

3.6.4*MANHOLE FRAMES AND COVERS ..... C-3-4

3.6.5*GRAVITY PIPELINE CONNECTIONS ..... C-3-4

3.6.6*MANHOLE FLOW CHANNELS ..... C-3-5

3.7*INSTALLING GRAVITY SERVICE LINES ..... C-3-5

3.7.1*GENERAL ..... C-3-5

3.7.2*INSTALLATION ..... C-3-8

3.7.3*SERVICE LINE POLE ..... C-3-8

3.8*CLEANING AND ALIGNMENT CHECK ..... C-3-9

3.9*TESTING ..... C-3-9

3.9.1*LEAKAGE ..... C-3-9

3.9.2*INFILTRATION TEST ..... C-3-9

3.9.3*EXFILTRATION TEST ..... C-3-9

3.9.4*AIR TESTING ..... C-3-16

3.9.5*DEFLECTION TESTING ..... C-3-16

3.9.5.1*ABS/PVC COMPOSITE PIPE D2680 ..... C-3-16

3.9.5.2*PVC D3034 SDR35 ..... C-3-17

3.9.6*VACUUM TESTING OF MANHOLES ..... C-3-18

3.9.7*MANHOLE CHIMNEY SEALS ..... C-3-19

**SECTION DESCRIPTION……PAGE NO.**

3.9.8*SANITARY SEWER TOLERANCES..... C-3-19

**4*INSURANCE, PROTECTION, AND GUARANTEES ..... C-4-1**

4.1*GENERAL..... C-4-1

4.2*LAWS, ORDINANCES AND REGULATIONS..... C-4-3

4.3*GUARANTEE OF WORK..... C-4-3

4.4*PROTECTION OF EXISTING UNDERGROUND UTILITY FACILITIES (ORC Section 153.64)..... C-4-4

4.5*PROTECTING EXISTING BUILDINGS AND STRUCTURES ..... C-4-4

4.6*MONUMENTS AND LANDMARKS..... C-4-4

4.7*ACCIDENT PREVENTION ..... C-4-5

# ALLOWABLE LEAKAGE PER 1000 FT. (305 m) OF PIPELINE * - GPH **

| | Nominal Pipe Diameter - Inches | | | | | | | | | | | | | | | |
|---|---|---|---|---|---|---|---|---|---|---|---|---|---|---|---|---|
| **Average Test Pressure psi (Bar)** | **3** | **4** | **6** | **8** | **10** | **12** | **14** | **16** | **18** | **20** | **24** | **30** | **36** | **42** | **48** | **54** |
| 450 (31) | 0.48 | 0.64 | 0.95 | 1.27 | 1.59 | 1.91 | 2.23 | 2.55 | 2.87 | 3.18 | 3.82 | 4.78 | 5.73 | 6.69 | 7.64 | 8.60 |
| 400 (28) | 0.45 | 0.60 | 0.90 | 1.20 | 1.50 | 1.80 | 2.10 | 2.40 | 2.70 | 3.00 | 3.60 | 4.50 | 5.41 | 6.31 | 7.21 | 8.11 |
| 350 (24) | 0.42 | 0.56 | 0.84 | 1.12 | 1.40 | 1.69 | 1.97 | 2.25 | 2.53 | 2.81 | 3.37 | 4.21 | 5.06 | 5.90 | 6.74 | 7.58 |
| 300 (21) | 0.39 | 0.52 | 0.78 | 1.04 | 1.30 | 1.56 | 1.82 | 2.08 | 2.34 | 2.60 | 3.12 | 3.90 | 4.68 | 5.46 | 6.24 | 7.02 |
| 275 (19) | 0.37 | 0.50 | 0.75 | 1.00 | 1.24 | 1.49 | 1.74 | 1.99 | 2.24 | 2.49 | 2.99 | 3.73 | 4.48 | 5.23 | 5.98 | 6.72 |
| 250 (17) | 0.36 | 0.47 | 0.71 | 0.95 | 1.19 | 1.42 | 1.66 | 1.90 | 2.14 | 2.37 | 2.85 | 3.56 | 4.27 | 4.99 | 5.70 | 6.41 |
| 225 (16) | 0.34 | 0.45 | 0.68 | 0.90 | 1.13 | 1.35 | 1.58 | 1.80 | 2.03 | 2.25 | 2.70 | 3.38 | 4.05 | 4.73 | 5.41 | 6.03 |
| 200 (14) | 0.32 | 0.43 | 0.64 | 0.85 | 1.06 | 1.28 | 1.48 | 1.70 | 1.91 | 2.12 | 2.55 | 3.19 | 3.82 | 4.46 | 5.09 | 5.73 |
| 175 (12) | 0.30 | 0.40 | 0.59 | 0.80 | 0.99 | 1.19 | 1.39 | 1.59 | 1.79 | 1.98 | 2.38 | 2.98 | 3.58 | 4.17 | 4.77 | 5.36 |
| 150 (10) | 0.28 | 0.37 | 0.55 | 0.74 | 0.92 | 1.10 | 1.29 | 1.47 | 1.66 | 1.84 | 2.21 | 2.76 | 3.31 | 3.86 | 4.41 | 4.97 |
| 125 (9) | 0.25 | 0.34 | 0.50 | 0.67 | 0.84 | 1.01 | 1.18 | 1.34 | 1.51 | 1.68 | 2.01 | 2.52 | 3.02 | 3.53 | 4.03 | 4.53 |
| 100 (7) | 0.23 | 0.30 | 0.45 | 0.60 | 0.75 | 0.90 | 1.05 | 1.20 | 1.35 | 1.50 | 1.80 | 2.25 | 2.70 | 3.15 | 3.60 | 4.05 |

*If the pipeline under test contains sections of various diameters, the allowable leakage will be the sum of the computed leakage for each size. **To obtain leakage in liters/hour, multiply the values in the table by 3.785.

# Regulations and Specifications
# Greene County, Ohio
# Part A-Regulations
## SECTION 1

**1*DEFINITIONS**
Unless the context specifically indicates otherwise, the meaning of terms in these Regulations shall be as follows:

**1.01*COUNTY**
Greene County, Ohio, Specifically, the Greene Sanitary Engineering Department.

**1.02*COUNTY COMMISSION**
Board of County Commissioners of Greene County, Ohio.

**1.03*SANITARY ENGINEER**
The appointed representative of the County Commission in the Greene County Sanitary Engineering Department who is a registered professional engineer.

**1.04*SPECIFICATIONS**
The construction requirements adopted by the County Commission by resolution.

**1.05*INSPECTOR**
A duly appointed representative of the County who is responsible for the enforcement of the specifications and quality of construction.

**1.06*EASEMENT**
A grant by the owner of land for a specified use of land for the installation and maintenance of sanitary sewers and/or water lines for an indefinite period of time or as dedicated for public right-of-way.

**1.07*PERMIT**
Permission to connect to the water supply or sanitary sewer system and/or to extend same.

**1.08*WATER SERVICE**
The readiness to supply or actual supplying of water for drinking, sanitation or fire protection to a premise on which a water service connection has been installed.

**1.09*WATER SERVICE CONNECTION**
The physical connection of a service branch with a water main.

**1.10*SANITARY SEWER**
A sewer which carries sanitary sewage and industrial wastes and to which storm, surface, and ground waters are not intentionally admitted.

**1.11*STORM SEWER**
A sewer which carries storm, surface and drainage water but which excludes sanitary sewage and industrial wastes, other than unpolluted waters.

**1.12* BUILDING DRAIN – SANITARY**
That part of the lowest horizontal piping of a drainage system which receives the discharge from sewage drainage pipes inside the walls of a building and conveys it to the building sewer at a point outside the building walls.

**1.13*BUILDING SEWER - SANITARY**
The extension from the building drain (sanitary) to the sanitary sewer and which conveys sewage only.

**1.14*SANITARY SEWAGE**
A combination of the water-carried wastes from residences, business buildings, institutions and commercial and industrial establishments contributed by reason of human occupancy.

**1.15*INDUSTRIAL AND COMMERCIAL WASTES**
The liquid wastes from industrial manufacturing, trade or business.

**1.16*SEWERAGE WORKS**
All facilities for collecting, pumping, treating and disposing of sanitary sewerage and industrial wastes.

**1.17*WASTEWATER TREATMENT PLANT**
Any arrangement of devices and structures used for treating wastewaters collected by the sanitary sewer system.

**1.18*GARBAGE**
Solid wastes from the domestic and commercial preparation, cooking and dispensing of food and from the handling, storage and sale of produce.

**1.19*PROPERLY SHREDDED GARBAGE**
The wastes from the preparation, cooking and dispensing of food that has been shredded to such a degree that all particles will be carried freely under the flow conditions normally prevailing in public sewers, with no particle greater than 1.27 centimeters (0.5 inch) in any dimension.

**1.20*SUSPENDED SOLIDS**
Solids those either float on the surface of, or are in suspension in water, sewage or other liquids, and which are removable by laboratory.

**1.21*SLUG**
Any discharge of water, sewage or industrial waste which in concentration of any constituent substance or in quantity of flow exceeds, for any duration longer than fifteen (15) minutes, more than five (5) times the average twenty-four (24) hour period concentration or quantity of flow during normal operation.

**1.22*WATERCOURSE**
A channel in which a flow of water occurs, either continuously or intermittently.

**1.23*NATURAL OUTLET**
Any outlet into a watercourse, pond, ditch, lake or other body of surface or ground water.

**1.24*COOLING WATER**
The water discharged from any system of condensation, air conditioning, cooling, refrigeration or other. It shall be free from odor and oil and shall contain no polluting substances.

**1.25*DEDUCT METER**
Meter that registers water usage that does not contribute to sanitary sewage flow. Deduct meter may be installed inside the customer's premises provided a remote reading device (furnished and installed by GCSE) is included.

**1.26*HOSE BIB**
Outside water faucet (also known as 'Sillcock').

# SECTION 2

## 2*GENERAL CONDITIONS

### 2.01*AUTHORITY

The Ohio Revised Code, Sections 6103.02, 6117.01 and 343.01, enables the County Commission to adopt regulations governing policies essential to the operation of the Sanitary Engineering Department under their jurisdiction.

### 2.02*OWNERSHIP AND CONTROL

The public water supply systems and sewerage works of Greene County, Ohio, including all appurtenances, are under the operation of the County and its authorized agents and employees. Such control shall include all phases and fixtures of the water supply systems and sewerage works to the ultimate point of metered consumption or from the point of usage.

### 2.03*EFFECTIVE DATE

These "Regulations" shall be effective on the date of adoption of a resolution by the County Commission. Henceforth, any other regulations previously adopted by the County Commission which are in direct conflict with this set of adopted "Regulations" shall be deemed to be repealed and/or declared void and all others shall remain in full force.

### 2.04*VALIDITY

Should any section or individual provision of this resolution be decided by the courts to be unconstitutional or invalid, such a decision shall not affect the validity of the resolution as a whole or any part hereof, other than the particular portion so held to be unconstitutional or invalid. It is the intention of the resolution that these "Regulations" are deemed to be independent one from the other.

### 2.05*ENFORCEMENT

These "Regulations" shall be enforced by the County or its designated representative, as directed by the Greene County Commission, in accordance with the Ohio Revised Code, Sections 6103.02 and 6117.01.

### 2.06*VIOLATION

It shall constitute a violation for any person, firm, group or corporation, either owner or agent, to tamper with or attempt to use facilities provided by the County without first obtaining the necessary permits and approvals. Any person, firm, group or corporation, either owner or agent, that obtains a permit or approval based on a false statement made in order to deceive the County shall be held in violation of this resolution and subject to prosecution. A violation shall also be considered by any infractions of the "Regulations."

### 2.07*PENALTIES

Any person, firm, group or corporation, either owner or agent, committing a violation of these "Regulations" shall be subject to revocation or suspension of permits or license and be guilty of a misdemeanor and upon conviction shall be fined by the County in accordance with the Ohio Revised Code, Sections 6103.99 and 6117.99, to insure that remedial action will be taken to rectify the violation and this fine shall be in effect until the violation is corrected. In addition, the violator of these "Regulations" shall be liable and responsible for any and all damages incurred as a result of the violation. Any violation of any section of these "Regulations" for which no penalty is specifically provided shall be punishable by a fine of not more than two hundred dollars ($200) with each day or act of violation considered a separate offense.

## 2.08*JURISDICTION

These "Regulations" shall be made applicable to all persons within the County Sanitary Sewer and Water Districts as established or amended or any other persons receiving either sanitary sewer or water service from systems operated by the County.

## 2.09*AGREEMENT

All persons, successors and assigns obtaining a permit from the Sanitary Engineering Department accept and agree to be bound by these "Regulations."

## 2.10*INTERPRETATION

The provisions of these "Regulations" shall be the minimum requirements adopted for the promotion of health, safety, and welfare of the constituents of Greene County, Ohio. These "Regulations" are not intended to repeal, abrogate, annul or in any manner interfere with any existing laws or rules of any governmental unit that are more stringent. Where these "Regulations" impose greater restrictions than are required by existing laws or rules, then the provisions of these "Regulations" shall take precedence and govern.

## 2.11*PERSONNEL

Inspectors, meter readers or employees of the County whose duty constitutes entrance upon private property, or into private premises, in connection with County business, shall be equipped with proper credentials as the County may deem necessary to identify them as agents of the County. Such authorized employees shall have access to the premises, at reasonable hours, to examine fixtures, record amounts and manners in which systems are being utilized and investigate supply of water and/or stoppage of sanitary sewers. Should access be denied, these employees for the purposes outlined above, services shall be disconnected and not restored until such a time as access is granted.

# SECTION 3

## 3*WATER SYSTEM

### 3.01*GENERAL

A. No physical connection shall be maintained between any other source of water or liquid and the County water supply piping. No spigot or outlet shall be physically connected to a drain or sewer or be submerged. The proper cross-connection prevention device shall be installed in accordance with the regulations of the Plumbing Inspection Division of the Greene County Health Department.

B. Should electrical grounding of A/C or D/C power source be permitted on the water system or any private extension thereof, a grounding strap, connecting inlet to outlet, shall be required from one side of the metering assembly and/or backflow preventer to the other.

C. A permit must be obtained by the property owner or a plumber engaged by the property owner in order to receive a service line connection. At this time the permit section will check the property records to verify that all applicable equalization charges against the property have been paid prior to issuing the permit. If the equalization and other charges levied have been paid, a permit will then be issued; if not, the property owner must pay the applicable charges levied before a permit is issued. Should a renewal of a service be desired, after it has been determined that there are no outstanding unpaid bills; then an employee of the County will restore the service. A list of the charges for the various services is attached herein under Part A of the Regulations in Section 7 “Schedule of Charges.”

D. Any consumer may have a service temporarily discontinued for a period not to exceed six (6) months by written request to the Sanitary Engineering Department. The purpose for the request shall be provided. Extensions for an additional six (6) months extension may be granted upon written request to the Sanitary Engineer. The meter will be turned off or removed and water shut off at the curb by the County. Should it not be possible to obtain a final reading, a closing statement will be estimated on the time elapsed since the last reading and the estimated consumption as determined by the Sanitary Engineering Department. Under no circumstances shall the closing statement be less than the minimum rate prorated for the time the water was used.

E. All employees of the County, designated for the purpose with proper identification, are authorized to enter, at reasonable hours, into any house, building or plant supplied with water from or connected to, or traversed by water mains of the County, to examine bibs, pipes, meters, cisterns, reservoirs, tanks or other apparatus for the purpose of ascertaining the quantity of water consumed or supplied or for placing or taking away any meter, instrument, pipe fitting, or for placing or taking away any meter, instrument, pipe fitting or other material belonging to the County or for any other reasonable purpose in connection with the water supply system.

F. Meter readings will normally be taken quarterly and as near the same date as is practicable. It is the intent of GCSED to convert all meter reading to a monthly basis through the use of automated meter reading technologies. As area(s) are converted they will be placed on a monthly reading cycle. If the meter reader is unable to obtain a reading because a meter is out of order, it will be replaced and the amount of water consumed will be estimated. If the meter reader cannot gain entrance to a residence having an inside meter, he will leave a card upon which the user may record the meter reading and return it to the Sanitary Engineering Department within five (5) days. The Sanitary Engineering Department will base its current bill upon the reading sent in by the customer. If a card is not returned, the bill will be estimated based upon past consumption records. This will be done for no more than two (2) consecutive meter reading periods. For meters not read at least once in each nine (9) months, the County will have the service discontinued.

G. The County shall make a charge for any service requiring a special trip to the property, such as temporary shut-offs. Only representatives of the County are authorized to install, disconnect or remove water meters from a service. Any meter not properly removed, which becomes lost or not recoverable, shall be chargeable to the property owner. No person without a permit from the Sanitary Engineering Department is allowed to turn a hydrant or valve other than as provided in the "Regulations" governing plumbers, excepting, however, members of the Fire Department in the performance of their duties. In case trouble occurs between the main and the curb stop or in the meter, the Sanitary Engineering Department should be called. If the trouble is beyond the meter, the curb stop should be shut off and a plumber called.

H. Service branches are installed at the expense of the property owner who is held responsible at all times for any leakage that may occur between the curb stop and the building. The plumber taking out the permit for the service is responsible for one (1) year after final inspection or any leaks developing between the corporation stop in the water main and the curb stop. The County will repair, without expense to the owner; any leaks, which occur between the main line and meter pit, including the curb, stop, providing such leaks are not caused by defective workmanship or material. The County has the right to replace any water meters as deems necessary and cannot be held responsible for damage to service lines caused by such work if reasonable care is exercised. Notice to replace inferior pipe will constitute reasonable care. Failure to repair leaks, remove obstructions preventing access to the meter pit or make payment of charges for work done by the County for such purposes, when notified to do so, will be sufficient cause for the County to enter the street and close the corporation stop which shall not be reopened until the cause for the closing has been remedied.

I. Consumers are required to keep meter pits packed or otherwise protected in such manner as to prevent freezing; they will be held responsible for any damage caused by freezing.

J. All meters must be accessible at all times. Failure to comply with this rule will be cause for discontinuing service, which will not be resumed until the trouble has been remedied. This rule shall apply to meters in meter pits, which are covered with dirt, or other materials or that is filled with water or gas; or where passage to meters is blocked so that the meters are not accessible.

K. A customer may request turn-off in order to permanently terminate charges. Water will be shut off at the main by the Sanitary Engineering Department. The customer will be responsible for the entire cost thereof.

L. A list of all current charges services performed is on file in the Sanitary Engineering Department office. These charges, fees, and rates are subject to amendment by the County Commission and are not to be construed as being fixed for an indefinite period of time.

## 3.02*WATER METERS

A. No meter shall be set until the final inspection has been made and approved and an application for service has been filed. It is unlawful for anyone to move into a residence until after final County inspection, approval and acceptance for metering.

B. Any meter violation shall be considered as tampering with the water system and shall carry the penalty as outlined in Part A, Regulations, Section 2, "General Conditions."

C. No extension, alterations or repairs shall be made to any water pipes or fixtures between meter and main line except by a plumber and with the notification of the Sanitary Engineering Department.

D. Meters are furnished to consumers by the County upon payment of a service connection charge. The service line connection charge varies in accordance with the size of the meter. A schedule of such charges is available at the Sanitary Engineering Department office.

E. Drilling or cutting-in extra holes in water meter vaults to permit the entry of water service lines downstream of the water meter will not be approved. All water service lines should be routed through the factory made cut-outs at the bottom of the vault.

F. A twenty-four (24) hour advance notice must be given for all meter settings.

**3.03*METER BY-PASSES**

Each service 1 1/2" diameter or larger shall be provided with a by-pass. The by-pass must be valved so that it can be sealed to prevent its use by anyone except County personnel. No meters will be allowed to be installed inside housing, business or commercial structures without approval of GCSED.

**3.04*SERVICE PER RESIDENCE AND METER PIT REQUIREMENTS**

Each separate residential, commercial, or industrial structure shall have a separate service branch and meter pit located outside the structure and one foot (1') outside the road right-of-way of the property to be served. The County may require properties or premises not so equipped to install additional service lines and meter pits at the expense of the property owner. No obstruction or landscaping shall be placed on the meter pit cover at any time. Meter pits shall not be located in open drainage ditch areas.

**3.05*METER TESTING**

The County will test and correct any meter which is registering incorrectly without the consent of the consumer and upon request, will test any of its meters and guarantee its accuracy against any overcharge within two percent (2%). Proper refund shall be made if the test shows the customer has been overcharged. In order to protect the County against unreasonable demands for this service, a charge shall be made if the test shows the meter to be registering properly.

**3.06*FIRE SERVICE**

A. Application for fire protection connections shall be made in writing to the Sanitary Engineering Department and no connection may be made without written permission from same.

B. Fire service connections may be made by any registered plumber with the approval of the County after approval of the plans for the connection by the Sanitary Engineering Department.

C. No person except an authorized agent of the fire department or the County may use a fire hydrant. In case of fire or inspection, the fire department shall have the right to use any hydrant, hose, pipe, or other fixture. They shall notify the Sanitary Engineering Department in writing of any use for maintenance purposes within twenty-four (24) hours of such use.

D. Developers of new subdivisions or parts thereof shall install all water mains, fire hydrants, valves, fittings, etc., at their expense. All work performed shall be in accordance with plans and specifications approved by the Sanitary Engineering Department.

E. No private fire hydrants shall be set without the inspection and approval of the Sanitary Engineering Department.

F. Private fire service inside buildings shall be the dry-type or wet systems equipped with approved fire detector meters. Construction of the private interior fire service cannot proceed until the plans have been approved by the Sanitary Engineering Department and written permission received.

## 3.07*BILLING METHODS AND PROCEDURES

A. Water service charges will be billed for any lot, parcel of land, building, enterprise, residence or premises provided an active water service connection or withdrawing water from the County water system. The water service charge is a continuous charge for all improved properties served by a connection whether occupied or vacant. Owners of property shall be held responsible for water used on their premises, but statements may be mailed to another designated person or entity, such as a tenant or agency. If the designated person or entity does not pay in accordance with the "Regulations" the owner shall be responsible for payment. Account delinquency shall be just cause for terminating services, which will be resumed only upon full payment of delinquent charges. Responsibility of payment of delinquent charges to the property rests with the current property owner. It is the responsibility of the prospective property owner to inquire of possible delinquent charges, which may be assumed upon ownership. This information will be given upon request of the Sanitary Engineering Department. GCSED reserves the right to deny service to any property owner/tenant that has unpaid balances on other GCSED water and/or sewer accounts.

B. Water service charges will be based upon readings taken from meters installed in accordance with Greene County Sanitary Engineering specifications, or in such manner and by such method as may be practicable in the light of the conditions and attendant circumstances of the case, as determined by the Sanitary Engineer.

C. Water meters shall normally be read every third month. Bills for the two (2) months preceding reading of the water meter shall be rendered on the basis of the "monthly minimum" charge. The bill for the month following reading of the water meter shall include the "monthly minimum" charge plus the "wholesale charges" for water used over the monthly minimum during the three-month period. In determining "wholesale charges," it shall be assumed that one-third (1/3) of the usage over the monthly minimum occurred each of the three (3) months. In areas of the system where meters are read monthly, the bill shall include the monthly minimum charge plus the wholesale charges for water used over the monthly minimum.

D. Bills are payable on or before the "due date" printed on the bill. Partial payments are acceptable, but any amount less prior late payment penalties not paid by the due date shall be considered delinquent and subject to a "late payment penalty" of seven and one-half percent (7.5%) per month.

When a bill or part thereof is not paid by the due date and is more than $80.00, a "Notice of Disconnection" will be sent to the customer advising that the water service will be terminated by the Disconnection Date if not paid by close of business on the Final Payment Date. Full payment must be made unless a prearranged payment plan is established and on file in our billing office. This plan must be followed or service will be terminated immediately.

In a landlord/tenant situation, a notice is sent to the landlord at the same time one is sent to the tenant. Service can also be refused a prospective tenant if there are any outstanding bills owed on a property.

The customer service worker cannot accept payment for delinquent bills. Any cost to terminate and reactivate water service will be added to the billing.

The Sanitary Engineering Department may, upon review of delinquent invoices and customer accounts, engage an outside collection agency for the purpose of collecting delinquent miscellaneous invoices and delinquent sewer & water bills, and may also invoke additional fees upon the delinquent debtor/customer, as deemed necessary, in order to offset the administrative cost of collection.

Unpaid charges constitute a lien upon the property. Unpaid charges for the periods of 1 September to 1 February and 1 March to 1 August or for periods as assigned by the Greene County Auditor shall be certified the following month to the Treasurer for collection. A charge shall be added for such certification.

E. It may become necessary from time to time to estimate water usage. If so, the bill will be marked "estimate." The customer will have ten (10) working days from issuance to contest an estimated bill.

F. Should the County be unable to render monthly bills because of labor shortage or some other deficiency, the bill may be rendered for a shorter or longer period but at the same monthly rate. When water has been turned off for a violation of the "Regulations," or failure to pay charges, the owner or occupant of such premises shall pay a fee for turning the water off and on.

## 3.08*REPAIR AND MAINTENANCE

A. The County shall have the right to shut off the water for repairs, extensions, tests, improvement or whenever necessary and will not be responsible or held liable for any accidents or damage which may result from interruption of service. Whenever possible and as time permits, all customers will be notified prior to discontinuance of service.

B. The County shall maintain all lines on dedicated easements or rights-of-way. No maintenance will be done on water mains that do not lie within easements or dedicated rights-of-way. These lines shall be maintained by the owner. Service shall be discontinued until repairs have been completed to the satisfaction of the County.

C. If a break or leak occurs in any service line between the main line and the curb stop, the County will repair this at its own expense as soon as possible. The owner will be required to pay all cost of repair to a service line on his property (meter pit to a structure). The County shall not be responsible for breakage of pipes or valves occurring during removal or installation of meters where such breakage is due to old or faulty plumbing.

D. All charges for repairs to meters damaged by freezing or any other cause must be paid when the next bill comes due.

E. Damage to water meters resulting from improper connections between boilers and furnaces or other heaters shall be the responsibility of the consumer and the cost of repairs will be charged to the owner.

F. No extensions, alterations, or repairs shall be made to any water pipes or fixtures between meter pit and main line except by a plumber and with the approval of the Sanitary Engineering Department.

## 3.09*TAMPERING WITH THE SYSTEM

A. No person other than an authorized agent of the County may connect to any of its water lines, tamper with or remove any meter or parts thereof or any seal or insert a meter bypass without permission of the Sanitary Engineering Department under penalty provided in Section 6103.99 of the Ohio Revised Code. A tampering violation is also due cause for having water service discontinued.

B. If the County finds that a meter seal has been broken, a connection installed ahead of the meter or any by-pass inserted or there is evidence that the meter has been tampered with, the water will be shut off and will not be turned on again until the consumer or owner of the premises pays for the estimated quantity of water which has been used and not registered and, in addition, shall pay a fee for turning on the water. The criminal laws of the state of Ohio provide severe penalties for tampering with water meters, meter seals, valves and other devices in the water system.

C. No person shall unlawfully secure a supply of water through a corporation stop, curb stop, valve or other device after it has been closed for the violation of any of the "Regulations" without first having secured the necessary permit from the Sanitary Engineering Department.

## 3.10*GUARANTEE OF SUPPLY

A. The County does not guarantee any fixed pressure or a continuous supply of water but will, in emergency, endeavor to notify affected customers.

B. Persons or entities using steam boilers, gas engines or other equipment or whose operation depends on a supply of water direct from the service pipe should have in mind the preceding rule and provide storage of sufficient water to operate a reasonable length of time.

C. In case of a serious fire(s) or water shortage or when for any cause it is necessary to conserve the water supply by limiting the use thereof, such an order shall be made and shall be obeyed by all users of water affected by such order and the County shall not be responsible for any damages resulting from any such limited use.

## 3.11*GUARANTEE OF SERVICE

Every reasonable effort will be attempted to restore service should an interruption of service occur. The County shall not be liable for any accidents or damage resulting from interruption of service or conditions caused by the design limitations of the various systems. Temporary shutdowns of the water supply by the County may be necessary for improvements or repairs. Whenever possible and as time permits, all customers will be notified prior to shut down.

## 3.12*CONSTRUCTION WATER

Water used during construction shall be metered and billed to the applicant for water service at the water rates in effect. A water meter shall be installed after application is made for service and the corresponding tap-in fees and water service connection charges paid. Meter Pit installation and approved backflow preventer required before any meter is set. Any damage to the water meter during the construction period will be the responsibility of the water service applicant.

## 3.13*REQUEST FOR INSPECTION

Requests for inspection of water tap shall be made twenty-four (24) hours in advance of inspection or tapping. All work must be visible when the inspection is performed.

## 3.14*SPECIAL WATER METERS

A. Irrigation meter-*Customers in certain water and sanitary sewer service areas who use large amounts of water for lawn sprinkling, air conditioning, washing cars, etc., may realize some savings in sewer charges by having a separate meter installed to measure this water usage. Since sanitary sewer service charges are based upon the amount of water consumed, water used for the above purposes does not terminate in the sanitary sewer system; therefore, no sanitary sewer service charge will be rendered on this separate use of water. See Part B, Construction Materials, Pages 11, 12, and 16 for details on irrigation meter installations. Saville and Vista Manor areas (city of Dayton water service) require separate meter pits for irrigation meters. The customer must bear the full cost of such meter installation. The meter must be purchased from the Sanitary Engineering Department. The Sanitary Engineering Department reserves the right to remove such water meter from any premises and substitute another in its place for purposes of testing or repairing.

B. Hose Bib Meter-*The Director may authorize the use of a hose bib meter (for single family residential customers only) which can be connected to standard hose bib which will register water used in filling swimming pools, and for new lawns (construction seeding and sodding, or reseeding/re-sodding). The Director is authorized the sale of water based on the hose bib meter usage without charging for sewer usage per SECTION 7, SCHEDULE OF CHARGES. Cost for sewer charges due to use of a hose bib meter will be credited to the customer on their account on the next billing cycle after the return of the meter. In no case will the credit reduce sewer use below the monthly minimum of 1,000 gallons per month. Customers requesting the use of the hose bib meter shall sign a statement acknowledging rules governing the use prior to receiving the device for their use.

1. Swimming Pools-*This special meter shall be issued for a period not to exceed four (4) days per calendar year for a single property owner.

2. New Lawns- This special meter shall be issued for a period not to begin prior to April 15th nor exceed October 15th of any calendar year.

## 3.15*WATER/SEWER BILL ADJUSTMENT POLICY

A. For Leaks That Do Not Enter Sewer System

1. Formal written application for a bill adjustment. This application form is available at the Sanitary Engineering Department.
2. Proof of leak and the repair through receipts from a plumber or for parts. (This requirement may be waived if repairs are verifiable). County Customer Service worker(s) sent on location to confirm the location of the leak and verify that the water would not have gone through the sewer system and that the repairs were made and complete.

If an adjustment is deemed appropriate, the sewer portion of the bill will be reduced to the customer's previous 12-month average.

Excess water usage is defined as a 200% increase in usage over the customer's average usage.

If an adjustment is deemed appropriate, the water adjustment will be 50% of the difference between the customer's previous 12-month average and the excess usage for the water charges.

B. For Leaks That Do Enter Sewer System

The Sanitary Engineer may adjust the bill for customers who have a repairable plumbing problem (leak) resulting in excess water usage on the following basis:

1. Formal written application for a bill adjustment. This application form is available at the Sanitary Engineering Department.
2. Proof of leak and the repair through receipts from a plumber or for parts. (This requirement may be waived if repairs are verifiable).
3. County Customer Service worker(s) sent on location to confirm the location of the leak and verify that the repairs were made and complete.

Excess water usage is defined as a 200% increase in usage over the customer's average usage.

If an adjustment is deemed appropriate, the adjustment will be 50% of the difference between the customer's previous 12-month average and the excess usage for both the water and sewer charges.

C. Adjustments are limited to one (1) per customer per location annually unless extenuating circumstances exist and are against a quarterly billing period. It is intended for this policy to apply to customers responding promptly to a "high" bill and that any plumbing problems so identified are repaired immediately.

D. Payments of Extraordinary Water and/or Sewer Bills-*The Sanitary Engineer shall have the authority to accept payment of extraordinary water and/or sewer bills in regular payments spread out over a period not to exceed twelve (12) months. Such authority shall not be exercised for customers who have been habitually late in paying their bills and revoked for customers who did not make payments as agreed. For the purposes of this section, an extraordinary water and/or sewer bill is one which includes a charge for a substantial amount of water lost through a leak.

## CROSS CONNECTION CONTROL

### 3.301*GENERAL POLICY

A. Purpose. The purpose of these Regulations is:

1. To protect the public potable water supply from contamination or pollution by isolating within the consumer's water system contaminants or pollutants which could backflow through the service connection into the public potable water system.
2. To promote the elimination or control of existing cross-connections, actual or potential, between the public or consumer's potable water system and non-potable water systems, plumbing fixtures and sources or systems containing process fluids.
3. To provide for the maintenance of a continuing program of cross-connection control which will systematically and effectively prevent the contamination or pollution of the public and consumer's potable water systems.

B. Application. These Regulations shall apply to all premises served by the public potable water system of the Board of Greene County Commissioners.

C. Policy. The Sanitary Engineer shall be responsible for protection of the public potable water system from contamination due to backflow of contaminants through the water service connection. If, in the judgment of the Sanitary Engineer, a backflow prevention device is necessary for a consumer's premises, the Sanitary Engineer or his authorized representative shall give notice to the consumer to install such approved backflow prevention device at each service connection to his premises. The consumer shall immediately install such approved device or devices at his own expense, and failure, refusal or inability on the part of the consumer to install such device or devices immediately shall constitute grounds for discontinuing water service to the premises until such device or devices have been installed.

### 3.302*DEFINITIONS

A. The following definitions shall apply in the interpretation and enforcement of these regulations:

1. “Air gap separation” means the unobstructed vertical distance through the free atmosphere between the lowest opening from any pipe or faucet supply water to a tank, plumbing fixture, or other device and the flood level rim of the receptacle.

2. “Approved” means that a backflow prevention device or method has been accepted by the water purveyor and the Director as suitable for the proposed use.

3. “Auxiliary water system” means any water system on or available to the premises other than the public water system and includes the water supplied by the system. These auxiliary waters may include water from another purveyor's public water system; or water from a source such as wells, lakes, or streams, or process fluids; or used water. They may be polluted or contaminated or objectionable or constitute a water source or system over which the water purveyor does not have control.

4. “Backflow” means the flow of water or other liquids, mixtures, or substances into the distributing pipes of a potable water supply from any source other than the intended source of the potable water supply.

5. “Backflow prevention device” means any device, method, or type of construction intended to prevent backflow into a potable water system.

6. “Consumer” means the owner or person in control of any premises supplied by or in any manner connected to a public water system

7. “Consumer's water system” means any water system, located on the consumer's premises, supplied by or in any manner connected to a public water system. A household plumbing system is considered to be a consumer's water system.

8. “Contamination” means an impairment of the quality of the water by sewage of process fluids or waste to a degree which could create an actual hazard to the public health through poisoning or through spread of disease by exposure.

9. “Cross-connection” means any arrangement whereby backflow can occur.

10. “Degree of hazard” is a term derived from an evaluation of the potential risk to health and the adverse effect upon the potable water system.

11. “Director” means the director of the Ohio Environmental Protection Agency.

12. “Double check valve assembly” means an assembly composed of two (2) single, independently acting, check valves including tightly closing shutoff valves located at each end of the assembly and suitable connections for testing the water-tightness of each check valve.

13. “Health hazard” means any condition, device, or practice in a water system or its operation that creates, or may create, a danger to the health and well-being of users. The word “severe” as used to qualify “health hazard” means a hazard to the health of the user that could reasonably be expected to result in significant morbidity or death.

14. “Interchangeable connection” means an arrangement or device that will allow alternate but not simultaneous use of two (2) sources of water.

15. “Non-potable water” means water not safe for drinking, personal, or culinary use.

16. “Person” means the state, any political subdivision, public or private corporation, individual, partnership, or other legal entity.

17. “Pollution” means the presence in water of any foreign substance that lends to degrade its quality so as to constitute a hazard to impair the usefulness or quality of the water to a degree which does not create an actual hazard to the public health but which does adversely and unreasonably affect such waters for domestic use.

18. “Potable water” means water which is satisfactory for drinking, culinary, and domestic purposes and meets the requirements of the Department of Health.

19. “Premises” - a parcel of real property, including land and building thereon.

20. "Process fluids" means any fluid or solution which may be chemically, biologically or otherwise contaminated or polluted in a form or concentration such as would constitute a health, pollution, or system hazard if introduced into the public or a potable consumer's water system. This includes, but is not limited to:
    a) polluted or contaminated waters;
    b) process waters;
    c) used waters originating from the public water system which may have deteriorated in sanitary quality;
    d) cooling waters;
    e) contaminated natural waters taken from wells, lakes, streams, or irrigation systems;
    f) chemicals in solution or suspension;
    g) oils, gases, acids, alkalis, and other liquid and gaseous fluids used in industrial or other processes, or for firefighting purposes.

21. "Public water system" means the Board of Greene County Commissioners owned potable water system subject to Section 6109.01 of the Ohio Revised Code.

22. "Reduced pressure principle backflow prevention device" means a device containing a minimum of two (2) independently acting check valves together with an automatically operated pressure differential relief valve located between the two (2) check valves. During normal flow and at the cessation of normal flow, the pressure between these two (2) checks shall be less than the supply pressure. In case of leakage of either check valve, the differential relief valve, by discharging to the atmosphere, shall operate to maintain the pressure between the check valves at less than the supply pressure. The unit must include tightly closing shutoff valves located at each end of the device, and each device shall be fitted with properly located test cocks.

23. "Sanitary Engineer" means the Greene County Sanitary Engineer appointed by the Board of Greene County Commissioners.

24. "Service connection" means the terminal end of a service line from the public water system. If a meter is installed at the end of the service, then the service connection means the downstream end of the meter.

25. "System hazard" means a condition posing an actual or potential threat of damage to the physical properties of the public water system or a potable consumer's water system.

26. "Pollution hazard" means a condition through which an anesthetically objectionable or degrading material not dangerous to health may enter the public water system or a potable consumer's water system.

27. "Used water" means any water supplied by a water purveyor from a public water system to a consumer's water system after it has passed through the service connection and is no longer under the control of the water purveyor.

28. "Water purveyor" means the Board of Greene County Commissioners or Greene County Sanitary Engineering Department.

## 3.303*WATER SYSTEM

A. The water system shall be considered as made up of two (2) parts: the public potable water system and the consumer's water system.

B. The public potable water system shall consist of the source facilities and the distribution system, and shall include all those facilities of the potable water system under the control of the Sanitary Engineer up to the point where the consumer's water system begins.

C. The source shall include all components of the facilities utilized in the production, treatment, storage, and delivery of water to the public distribution system.

D. The public distribution system shall include the network of conduits used for delivery of water from the source to the consumer's water system.

E. The consumer's water system shall include those parts of the facilities beyond the service connection which are utilized in conveying water from the public distribution system to points of use.

## 3.304*CROSS CONNECTIONS PROHIBITED

A. No water service connection shall be installed or maintained to any premises where actual or potential cross-connections to the public potable or consumer's water system may exist unless such actual or potential cross-connections are abated or controlled to the satisfaction of the Sanitary Engineer.

B. No connection shall be installed or maintained whereby an auxiliary water supply may enter a public potable or consumer's water system unless such auxiliary water supply and the method of connection and use of such supply shall have been approved by the Sanitary Engineer and by the Director of the Environmental Protection Agency as required by Section 6109.13 of the Ohio Revised Code.

## 3.305*SURVEY AND INVESTIGATIONS

A. The consumer's premises shall be open at all reasonable times to the Sanitary Engineer or his authorized representative, for the conduction of surveys and investigations of water use practices within the consumer's premises to determine whether there are actual or potential cross-connections to the consumer's water system through which contaminants or pollutants could backflow into the public potable water system.

B. On request by the Sanitary Engineer, or his authorized representative, the consumer shall furnish information on water use practices within his premises.

C. It shall be the responsibility of the water consumer to conduct periodic surveys of water use practices on his premises to determine whether there are actual or potential cross-connections to his water system through which contaminants or pollutants could backflow into his or the public potable water system.

## 3.306*WHERE PROTECTION IS REQUIRED

A. An approved backflow prevention device shall be installed on each service line to a consumer's water system serving premises, where in the judgment of the Sanitary Engineer or the Director, actual or potential hazards to the public potable water system exist.

B. An approved backflow prevention device shall be installed on each service line to a consumer's water system serving premises where the following conditions exist: Premises having an auxiliary water supply, unless such auxiliary supply is accepted as an additional source by the Sanitary Engineer and the source is approved by the Ohio Environmental Protection Agency.

1. Premises on which any substance is handled in such a fashion as to create an actual or potential hazard to the public potable water system. This shall include premises having sources or systems containing process fluids or waters originating from the public potable water system which are no longer under the sanitary control of the Sanitary Engineer.
2. Premises having internal cross-connections that, in the judgment of the Sanitary Engineer, are not correctable or having intricate plumbing arrangements which make it impractical to determine whether or not cross-connections exist.
3. Premises where, because of security requirements or other prohibitions or restrictions, it is impossible or impractical to make a complete cross-connection survey.
4. Premises having a repeated history of cross-connections being established or re-established.
5. Others specified by the Sanitary Engineer or the Director.

C. An approved backflow prevention device shall be installed on each service line to a consumer's water system serving, but not necessarily limited to, the following types of facilities unless the Sanitary Engineer or the Director determines that no actual or potential hazard to the public potable water system exists.

1. Hospitals, mortuaries, clinics, nursing homes
2. Laboratories
3. Piers, docks, waterfront facilities
4. Sewage treatment plants, sewage pumping station or storm water pumping station
5. Food or beverage processing plants
6. Chemical plants
7. Metal plating industries
8. Petroleum processing or storage plants
9. Radioactive material processing plants or nuclear reactors
10. Car wash
11. Others specified by the Sanitary Engineer or the Director
12. All of the above commercial accounts shall have a standard ASSE 1013 Backflow Prevention Device.

D. An approved backflow prevention device shall be installed at any point of connection between the public potable or consumer's water system and an auxiliary water supply, unless such auxiliary supply is accepted as an additional source by the Sanitary Engineer and the source is approved by the Ohio Environmental Protection Agency.

## 3.307*TYPE OF PROTECTION REQUIRED

A. The type of protection required under Sections 3.306.A., 3.306.B. and 3.306.C. of these regulations shall depend on the degree of hazard which exists as follows:

1. An approved air gap separation shall be installed where the public potable water system may be contaminated with substances that could cause a severe health hazard.
2. An approved air gap separation or an approved reduced pressure principle backflow prevention device shall be installed where the public potable water system may be contaminated with a substance that could cause a system or health hazard.

3. An approved air gap separation or an approved reduced pressure principle backflow prevention device or an approved double check valve assembly shall be installed where the public potable water system may be polluted with substances that could cause a pollution hazard not dangerous to health.

B. The type of protection required under Section 3.306.D of these regulations shall be an approved air gap separation or an approved interchangeable connection.

C. Where an auxiliary water supply is used as a secondary source of water for a fire protection system, the provisions of Section 3.307.B for an approved air gap separation or an approved interchangeable connection may not be required providing:

1. At premises where the auxiliary water supply may be contaminated with substances that could cause a system or health hazard, the public or consumer's potable water system shall be protected against backflow by installation of an approved reduced pressure principle backflow prevention device.
2. At all other premises, the public or consumer's potable water system shall be protected against backflow by installation of either an approved reduced pressure principle backflow prevention device or an approved double check valve assembly.
3. The public or consumer's potable water system shall be the primary source of water for the fire protection system.
4. The fire protection system shall be normally filled with water from the public or consumer's potable water system.
5. The water in the fire protection system shall be used for fire protection only with no regular use of water from the fire protection system downstream from the approved backflow prevention device.
6. The water in the fire protection system shall contain no additives.

## 3.308*BACKFLOW PREVENTION DEVICES

A. Any backflow prevention device required by these rules and regulations shall be of a model or construction approved by the Sanitary Engineer and Director and shall comply with the following:

1. An air gap separation to be approved shall be at least twice the diameter of the supply pipe, measured vertically above the top rim of the vessel, but in no case less than one inch (1”).
2. A double check valve assembly or a reduced pressure principle backflow prevention device shall be approved by the Sanitary Engineer, and shall appear on the current “list of approved backflow prevention devices” of the Ohio Environmental Protection Agency. The double check valves, if installed in a pit, shall have brass plugs screwed into all test ports. Test ports shall be installed as shown on Page 22 of this section.
3. An interchangeable connection to be approved shall be either a swing type connector or a four-way valve of the lubricated plug type that operates through a mechanism which unseats the plug, turns it ninety degrees (90°) and reseats the plug. Four-way valves shall not be used as stop valves but must have separate stop valves on each pipe connected to the valve. The telltale port on the four-way valve shall have no piping connected and the threads or flange on this port shall be destroyed so that a connection cannot be made.

B. Existing backflow prevention devices approved by the Sanitary Engineer or the Ohio Environmental Protection Agency at the time of installation and properly maintained shall, except for inspection and maintenance requirements, be excluded from the requirement of Section 3.308.A. of this regulation providing the Sanitary Engineer is assured that they will satisfactorily protect the public potable water system. Whenever the existing device is moved from the present location or requires more than minimum maintenance or when the Sanitary Engineer finds that the maintenance of the device constitutes a hazard to health, the device shall be replaced by a backflow prevention device meeting the requirements of these regulations.

## 3.309*INSTALLATION

A. Backflow prevention devices required by these regulations and specifications shall be installed at a location and in a manner approved by the Sanitary Engineer and shall be installed by and at the expense of the water consumer. In addition, any backflow prevention device required by Sections 3.306.B. and 3.306.C. of these regulations shall be installed at a location and in a manner approved by the Ohio Environmental Protection Agency as required by Section 6109.13 of the Ohio Revised Code. In addition to being approved by the OEPA, these devices shall be tested by a person certified by the state of Ohio to do so. A copy of the test result shall be provided by the customer to the Sanitary Engineer prior to start of use. Each backflow prevention device must have an A.S.S.E. number stamped on a thin metal plate attached to the device.

B. Backflow prevention devices installed on the service line to a consumer's water system shall be located on the consumer's side of the water meter, as close to the meter as is reasonably practical, and prior to any other connections.

C. Pits or vaults shall be of water-tight construction, be so located and constructed as to prevent flooding and shall be maintained free from standing water by means of either a sump pump or a suitable drain. Such sump pump or drain shall not connect to a sanitary sewer nor permit flooding of the pit or vault by reverse flow from its point of discharge. An access ladder and adequate natural or artificial lighting shall be provided to permit maintenance, inspection, and testing of the backflow prevention device.

## 3.310*INSPECTION AND MAINTENANCE

A. It shall be the duty of the consumer at any premises on which backflow prevention devices required by these regulations are installed have inspection, tests and overhaul made in accordance with the following schedule or more often where inspections indicate a need.

1. Air separation shall be inspected at time of installation and at least every twelve (12) months thereafter.
2. Double check valve assemblies shall be inspected and tested for tightness at time of installation and at least every six (6) months thereafter.
   They shall be dismantled, inspected internally, cleaned and replaced whenever needed and at least every three (3) years.
3. Reduced pressure principle backflow prevention devices shall be inspected and tested for tightness at time of installation and at least every twelve (12) months thereafter.
   They shall be dismantled, inspected internally, cleaned and repaired whenever needed and at least every five (5) years.
4. Interchangeable connections shall be inspected at time of installation and at least every twelve (12) months thereafter.

B. Inspections, tests, and overhaul of backflow prevention devices shall be made at the expense of the water customer and shall be performed by a person certified by the state of Ohio to do so. A copy of any inspection or test report shall be provided by the customer to the Sanitary Engineer within ten (10) working days of such inspection or test.

C. Whenever backflow prevention devices required by these regulations are found to be defective, they shall be repaired, or replaced at the expense of the consumer without delay.

D. The water consumer must maintain a complete record of each backflow prevention device from purchase to retirement. This shall include a comprehensive listing that includes a record of all tests, inspections and repairs. Records of inspections, tests, repairs and overhaul shall be submitted to the Sanitary Engineer.

E. Backflow prevention devices shall not be bypassed, made inoperative, removed or otherwise made ineffective without specific authorization by the Sanitary Engineer.

**3.311*BOOSTER PUMPS**

A. Where a booster pump has been installed on the service line to or within any premises, such pump shall be equipped with a low pressure cut-off device designed to shut-off the booster pump when the pressure in the service line on the suction side of the pump drops to ten pounds (10 lbs.) per square inch gauge or less.

B. It shall be the duty of the water consumer to maintain the low pressure cut-off device in proper working order and to certify to the Sanitary Engineer, at least once a year that the device is operable.

**3.312*VIOLATIONS**

A. The Sanitary Engineer shall deny or discontinue, after reasonable notice to the occupants thereof, the water service to any premises wherein any backflow prevention device required by these regulations is not installed, tested and maintained in a manner acceptable to the Sanitary Engineer, or if it is found that the backflow prevention device has been removed or by-passed, or if an unprotected cross-connection exists on the premises, or if a low pressure cut-off required by these regulations is not installed and maintained in working order.

B. Water service to such premises shall not be restored until the consumer has corrected or eliminated such conditions or defects in conformance with these regulations and to the satisfaction of the Sanitary Engineer.

C. The consumer shall be liable for all damages created by a violation of these regulations and specifications.

# OHIO E.P.A.

# BACKFLOW PREVENTION PROGRAM

The Ohio EPA no longer maintains a list of approved Backflow Prevention Devices. Approved Backflow Prevention Devices are no approved by rule in accordance with the Ohio Administrative Code Rule 3745-95-06 (A) which refers to the appropriate third party approval standards; see 3745-95-06-Backflow Prevention (Adobe PDF).

# SECTION 4

## 4*SANITARY SEWER SYSTEM

### 4.01*WASTE TO BE DISCHARGED IN SANITARY

SEWER All water-borne waste from toilets, lavatories, bathtubs, showers, laundry tubs, washing machines, refrigeration drips, soda fountains, drinking fountains, sinks, basement and garage floor drains (with the use of grease traps) shall be discharged into the sanitary sewer system. Any other waste will be permitted only upon written authorization from the Greene County Sanitary Engineering Department.

### 4.02*PROHIBITED WASTES

No person shall discharge, or cause to be discharged; the following substances, materials, waters or wastes to the sanitary sewer if such wastes can harm either the sewers, sewage treatment process or equipment, have an adverse effect on the receiving stream or can otherwise endanger life, health, public property or constitute a nuisance:

A. No person shall discharge or cause to be discharged, any storm water, surface water, ground water, roof runoff, subsurface drainage (i.e., subsoil drains either under basement floors or around the foundation), uncontaminated water or unpolluted industrial process waters to any sanitary sewer. Storm water and all other unpolluted drainage shall be discharged to such sewers as are specifically designated storm sewers or a natural watercourse.

B. Any waters or wastes having pH lower than 6.0 or having any other corrosive property capable of causing damage or hazard to structures, equipment and personnel of the sewage works.

C. Solid or viscous substances in quantities or of such size capable of causing obstruction to the flow in sewers, or other interference with the property operation of sewerage works (such as, but not limited to, ashes, cinders, sand, mud, straw, shavings, metal, glass, rags, feathers, tar, plastics, wood, unground garbage, whole blood, paunch manure, hair and fleshings, entrails, and paper dishes, cups, milk containers, etc., either whole or ground by garbage grinders).

D. Any waters or wastes containing iron, chromium, magnesium, copper, zinc and similar objectionable or toxic substances or wastes exerting an excessive chlorine requirement to such degree that any such material received in the composite sewage at the wastewater treatment plant exceeds the limits established by the County for such materials.

E. Any waters or wastes containing phenols or other taste or odor producing substances in such concentrations exceeding limits which may be established by the County as necessary, after treatment prescribed by the state, federal or other public agencies of jurisdiction for such discharge to the receiving waters. Any radioactive wastes or isotopes of such half-life or concentration as may exceed limits established by the County in compliance with applicable state or federal regulations.

F. Any waters or wastes having a pH in excess of 10 or any materials which exert or cause waters or wastes to have a pH in excess of 10.

G. Unusual concentrations of inert suspended solids (such as, but not limited to, Fullers earth, lime slurries and lime residues) or of dissolved solids (such as, but not limited to sodium chloride and sodium sulfate).

H. Excessive discoloration (such as, but not limited to, dye wastes and vegetable tanning solutions).

I. Unusual biochemical oxygen demand, chemical oxygen demand or chlorine requirements in such quantities as to constitute a significant load on the wastewater treatment plant.

J. Unusual volume of flow or concentration of wastes constituting “slugs” as defined herein.

K. Waters and wastes containing substances which are not amenable to treatment by reduction by the wastewater treatment processes employed are not to be discharged except by written approval of the County. Industrial discharges must meet the requirements of any other governmental agencies having jurisdiction over discharge to the receiving waters.

L. Any liquid or vapor having a temperature higher than one hundred fifty degrees Fahrenheit (150°F) (sixty-five degrees Centigrade [65°C]).

M. Any water or waste containing fats, wax, grease or oils, whether emulsified or not, in excess of two hundred (200) mg/l or containing substances which may solidify or become viscous at temperatures between thirty-two degrees Fahrenheit (32°F) (zero degrees Centigrade [0°C]) and one hundred fifty degrees Fahrenheit (150°F) (sixty-five degrees Centigrade [65°C]).

N. Any garbage that has not been properly shredded. The installation and operation of any garbage grinder equipped with a motor of 0.75 horsepower (0.76 hp metric) or greater shall be subject to the review and approval of the County.

O. Any waters or wastes containing strong acid iron pickling wastes or concentrated plating solutions, whether neutralized or not.

P. Any gasoline, benzene, naphtha, fuel oil or other flammable or explosive liquid, solid, gas or phenols.

Q. Any waters or wastes containing toxic or poisonous solids, liquids or gasses in sufficient quantity, either singly or by interaction with other wastes, to injure or interfere with any wastewater treatment process, constitute a hazard to humans or animals, create a public nuisance or create any hazard in the receiving waters of the wastewater treatment plant, including but not limited to, cyanides in excess of two (2) mg/l as CN in the wastes as discharged to the sanitary sewer.

NOTE: The above prohibited wastes will be subject to any provisions of the National Pollutant Discharge Elimination System of the United States EPA if they are more stringent.

## 4.03*JUDGMENT OF WASTE QUALITY

If any waters or wastes are discharged, or are proposed to be discharged, to the sanitary sewers, which waters or wastes containing the substances or possess the characteristics enumerated previously and which may have a deleterious effect upon the sewerage works, processes, equipment or receiving waters or which otherwise create a hazard to life or constitute a public nuisance, the County may:
A. Reject the wastes or,

B. Require pretreatment to an acceptable condition for discharge to the sanitary sewers and require payment to cover the added cost of handling and treating these wastes. The design and installation of pretreatment facilities shall be subject to the review and approval of the Sanitary Engineering Department and subject to the requirements of all applicable codes, ordinances and laws.

C. No Discharger shall discharge wastewater containing concentrations of the following enumerated materials, exceeding the following values:

| Material | Monthly Average | Daily Maximum Limit |
|---|---|---|
| BOD | 1,000 mg/l | 1,000 mg/l |
| SS | 1,000 mg/l | 1,000 mg/l |
| Oil & Grease | 200 mg/l | 200 mg/l |
| Floatable Oil & Grease | None Permitted | |

BOD and/or SS between 300 and 1000 mg/l falls under an industrial user charge as follows:

300-500 mg/l BOD and/or SS.....$ 15.46/1,000 gallons*
500-1,000 mg/l BOD and/or SS.....$ 30.93/1,000 gallons*

*Requires installation of wastewater flow meter at user expense.

No Discharger shall discharge wastewater in excess of the following local industrial wastewater discharge limitations. These limits are technically based in order to prevent pass-through water quality violations, contamination of sludge, and the inhibition of biological wastewater treatment processes.

| Pollutant | Limit |
|---|---|
| Arsenic | 1.0 mg/l |
| Cadmium | 1.0 mg/l |
| Chromium (Total) | None |
| Copper | 1.0 mg/l |
| Cyanide (Free) | 6.0 mg/l |
| Lead | 3.0 mg/l |
| Mercury | 0.03 mg/l |
| Nickel | 6.0 mg/l |
| Selenium | 1.0 mg/l |
| Silver | None |
| Zinc | 1.0 mg/l |

**4.04*SPECIAL APPURTENANCES**

When required by the County, the owner of any property serviced by a building sewer carrying other than residential wastes shall install a suitable control manhole, together with such necessary meters and other appurtenances in the building sewer to facilitate observation, sampling and measurement of the wastes. Such manhole, when required, shall be readily accessible and safely located and shall be constructed in accordance with plans approved by the County. The manhole shall be installed by the owner at his expense and shall be maintained by him so as to be safe and accessible at all times. Grease traps of a design approved by the Sanitary Engineer shall be installed by the property owner for every sewer connection into which food waste is discharged from any business, commercial, or institutional food service, preparation, or disposal operation. Any such properties not currently equipped with an approved grease trap shall install one no later than 1 January 1997. Grease traps shall be cleaned every three (3) months or as directed by the Sanitary Engineer. Proof of cleaning shall be certified to the Sanitary Engineer on forms provided with the bill for sewer service. Failure to install or clean grease traps and provides proper certification of such cleaning will result in suspension of sewer service until compliance is achieved.

**4.05*TESTING**

A. All measurements, tests or analyses of the characteristics of waters and wastes, to which reference is made in this ordinance, shall be determined in accordance with the latest edition of “Standard Methods for the Examination of Water and Waste Water” published by the American Health Association and shall be determined at the control manhole provided or upon suitable samples taken at said control manhole. In the event the event that no special manhole has been required, the control manhole shall be considered to be the nearest downstream manhole in the public sewer to the point at which the building sewer is connected. Sampling shall be carried out by customarily accepted methods to reflect the effect of constituents upon the sewerage works and to determine the existence of hazards to life, health and property. The particular application involved will determine whether a twenty-four (24) hour composite of all outfalls or a premise is appropriate or whether a grab sample of samples should be taken. Normally, but not always, biochemical oxygen demand and suspended solids analysis are obtained from twenty-four (24) hour composites of all outfalls whereas pH's are determined from periodic grab samples.

B. It is not the intent of any statement contained herein to prevent any special arrangement and/or agreement between the County and any user of the sanitary sewer system that discharges a waste of unusual strength or character, subject to special payment to the County by this user for the treatment of this waste.

## 4.06*BILLING METHODS AND PROCEDURES

A. Sanitary sewer service charges will be billed for any lot, parcel of land, building, enterprise, residence or premises discharging sanitary sewage, industrial wastes, water or other liquids, either directly or indirectly, into the County sanitary sewerage system. The sanitary sewer service charge is a continuous charge for all improved properties served by a connection whether occupied or vacant. The owner of the property or properties is responsible for payment of all service charges whether incurred under his ownership or previously. Statements may be mailed to another designated person, such as a tenant or agent; however, the owner is ultimately responsible for payment. GCSED reserves the right to deny service to any property owner/tenant that has unpaid balances on other GCSED water and/or sewer accounts.

B. Sanitary sewer service charges will be based on water usage that contributes to sewage flow, as measured by water meters installed as approved by the Sanitary Engineer. All sources of water, public or private, contributing to sewage flow shall be metered at the property owner's expense. A connection charge--based on meter size--will be imposed for each meter.

Pursuant to the Board of Greene County Commissioners' Resolution No. 95-9-21-10, all properties connected to the sewer system on or before 21 September 1995, using only private water sources, or using both public and private water sources that contribute to sewage flow, shall be required to have meters installed on such sources, at County expense, on or before 21 September 2000. At that time, all sewer service charges will be based on water usage that contributes to sewage flow. Until that time, sewer service charges for those properties will be based on application of the Ohio E.P.A. "Suggested Sewage Flow Guide" from Water Supply, Sewerage and Sewage Treatment for Public Buildings in Ohio, as amended, OR on the metered flow of the public water service connection (if such exists), whichever is greater.

C. Water meters used for sewer service billing shall normally be read every third month. Bills for the two (2) months preceding reading of water meter shall be rendered on the basis of the "monthly minimum" charge. The bill for the month following reading of the water meter shall include the "monthly minimum" charge plus the "wholesale charges" for sewer used over the monthly minimum during the three-month period. In determining "wholesale charges," it shall be assumed that one-third of the usage over the monthly minimum occurred each of the three (3) months. In areas of the system where water meters are read monthly, the bill shall include the monthly minimum charge plus the wholesale charges for sewer used over the monthly minimum.

D. Bills are payable on or before the "due date" printed on the bill. Partial payments are acceptable, but any amount less prior late payment penalties not paid by the due date shall be subject to a "late payment penalty" of seven and one-half percent (7.5%) per month. Unpaid charges constitute a lien upon the property. Unpaid charges for the periods of 1 September to 1 February and 1 March to 1 August, or for periods as assigned by the Greene County Auditor, shall be certified the following month to the Treasurer for collection. A charge shall be added for such certification.

E. It may become necessary from time to time to estimate water usage. If so, the bill will be marked "estimate." The customer will have ten (10) working days from issuance to contest an estimated bill.

F. Should the Sanitary Engineering Department be unable to render monthly statements or due to operational adjustments delay the mailing, the statement may be rendered for a shorter or longer period but at the same monthly rate.

G. A customer may request permanent sanitary service line abandonment. The sanitary lateral will be disconnected and plugged at the sanitary sewer main by the Sanitary Engineering Department. The customer will be responsible for the entire cost thereof.

## 4.07*TAMPERING WITH THE SYSTEM

A. No person, firm, group or corporation, either owner or agent, shall attempt to make any type of connection to the sanitary sewer system without first having obtained a permit from the Sanitary Engineering Department.
Regulations and Specifications Greene County, Ohio Part A--Regulations

B. No act shall be committed that would tend to hamper or restrict in any way the normal function of the sanitary sewage system.

C. No physical connection is permitted between a potable water supply and the sanitary sewer system.

D. Sanitary sewer lateral on private properties are owned by the property owner who is responsible of the repair and maintenance of the lateral. Proper permits must be obtained from the plumbing department of the appropriate jurisdiction before repair or replacement.

Sanitary sewer laterals within the public right-of-way or within a sanitary sewer easement are owned by the Office of Sanitary Engineering. Any property owner claiming to need a repair of the sewer lateral within the public right-of-way and/or easement that connects their building to the public sewer must notify the Office of Sanitary Engineering.

a) If the office of Sanitary Engineering determines that a repair to the sewer lateral with these areas is necessary, the Office of Sanitary Engineering will make repairs as it determines are appropriate.

   During the repair, if it is discovered that the repair is necessary die to damage caused by the property owner (or by a contractor retained by the property owner), the property owner shall be responsible for reimbursing the Office of Sanitary Engineering all costs associated with the repair of the lateral.

b) The office of Sanitary Engineering will not initiate repairs to a sewer lateral within these areas that it determines are not necessary. If the property owner is in disagreement with the Office of Sanitary Engineering, the property owner may elect to excavate the lateral to expose it for inspection. If it is discovered that the lateral is damaged and is in need of repair, the Office of Sanitary will reimburse the property owner all associated costs provided the damage isn't due to the owner as outlined in subsection a) above.

   Prior to initiating the excavation, the property owner (or contractor) shall obtain a permit from the Office of Sanitary Engineering and nay other permits and notifications as required by law. All work shall be done in the presence of the Office of Sanitary Engineering. The owner (or contractor) is responsible for providing advance notice a minimum of one workday prior to commencing work.

## 4.08*DISPOSAL OF SEPTIC TANK AND HOLDING TANK WASTES

A. No person, firm or corporation, either owner or agent, shall discharge septic tank or holding tank wastes into any manhole or other appurtenance of any sewer which discharges either directly or indirectly into the sanitary sewerage facilities of the County.

B. Septic tank and holding tank wastes originating within the County may be discharged into the sanitary sewerage system only at those locations designated by the Sanitary Engineering Department. Septic tank and holding tank wastes originating outside the County are prohibited from being discharged into sewerage facilities within the County or into sewerage facilities draining into the County.

C. A permit shall be obtained from the Greene County Health Department for each tank vehicle and shall be displayed at all times on the vehicle. Permits must be renewed annually on or before the first regular business day of each year. The capacity in gallons of each vehicle shall be clearly marked on the tank and each vehicle. Charges for discharge will be upon vehicle capacity regardless of quantity or contents.

D. Any person, firm or corporation, either owner or agent, discharging septic tank wastes into the sanitary sewerage facilities of the County shall pay the Sanitary Engineering Department at a rate of one hundred dollars ($100) per one thousand (1,000) gallons as a sewage disposal charge. The procedure for payment shall be as established by the Sanitary Engineering Department. When discharging to a Greene County Sanitary Engineering Department facility, the operator of all tank trucks must complete a Waste Certificate of Origin (see Page 42). Falsification or misrepresentation of information submitted subjects the waste hauler to penalties noted in Paragraph "E" of this section. The Greene County Sanitary Engineering Department reserves the right to reject or refuse to accept any load.

E. Any person, firm or corporation, either owner or agent, violating the provisions of this regulation shall be liable for any expense, loss or damage occasioned by reason of such violation. Such violation will be reported to the Ohio Environmental Protection Agency, the Board of Health, and other agencies as appropriate for enforcement action.

F. Any person, firm or corporation discharging wastes from the holding tanks of recreational vehicles into the sanitary sewerage facilities of the County shall pay the Sanitary Engineering Department at a rate of five dollars ($5) per 50 gallons as a sewerage disposal charge. The procedure for payment shall be established by the Sanitary Engineering Department. The five (5) dollar per 50 gallon fee shall be waived for Greene County sanitary sewer customers (proof of which will be a recent sanitary sewer bill). When discharging to a Greene County Sanitary Engineering Department facility, the owner/driver must complete a Certification of Waste form certifying that the contents contain domestic waste and does not contain prohibited wastes.

Falsification or misrepresentation of information submitted subjects the waste hauler to penalties noted in Paragraph "F" of this section. The Greene County Sanitary Engineering Department reserves the right to reject or refuse to accept any load.

## 4.09*REPAIRS AND MAINTENANCE

A. The County shall make a charge for any service requiring a special trip to the property provided the sanitary sewer is in good working order.

B. Sanitary Sewer Laterals:

1. Sanitary Sewer laterals on private properties are owned by the property owner who is responsible for the repair and maintenance of the lateral. Proper permits must be obtained from the plumbing department of the appropriate jurisdiction before repair or replacement.
2. Sanitary sewer laterals within the public right-of-way or within a sanitary sewer easement are owned by the Sanitary Engineering Department. Property owners are responsible for routine cleaning of the lateral to the main. Any property owner claiming to need a repair of the sewer lateral within the public right-of-way and/or easement that connects their building to the public sewer must notify the Sanitary Engineering Department.

C. If the Sanitary Engineering Department determines that a repair to the sewer lateral within these areas is necessary; the Sanitary Engineering Department will make repairs as it determines are appropriate. During the repair, if it is discovered that the repair is necessary due to damage caused by the property owner (or by a contactor retained by the property owner), the property owner shall be responsible for reimbursing the Sanitary Engineering Department all costs associated with the repair of the lateral.

D. The Sanitary Engineering Department will not initiate repairs to a sewer lateral within these areas that it determines are not necessary. If the property owner is in disagreement with the Sanitary Engineering Department, the property owner may elect to excavate the lateral to expose it for inspection. If it is discovered that the lateral is damaged and is in need of repair, the Sanitary Engineering Department will reimburse the property owner all associated costs provided the damage isn't due to the owner as outlined in subsection (C.) above. Prior to initiating the excavation, the property owner (or contractor) shall obtain a permit from the Sanitary Engineering Department and any other permits and notifications as required by law. All work shall be done in the presence of the Sanitary Engineering Department. **The owner (or contractor) is responsible for providing advance notice a minimum of one workday prior to commencing work.**

# GREENE COUNTY BEAVERCREEK WASTEWATER TREATMENT FACILITY WASTE CERTIFICATE OF ORIGIN

In accordance with state laws and County regulations and specifications, only Greene County domestic septic tank residuals will be accepted for disposal and treatment at this facility.

NO INDUSTRIAL WASTE IS PERMITTED TO BE DISCHARGED.

Name of Hauling Company _____

Board of Health Permit No. _____

Date Discharged _____ Gallons Discharged _____ Time _____

Origin of Waste Business _____ Residential _____

Name _____ Address
_____
_____

Phone Number _____

By signing this document I acknowledge that falsification or misrepresentation of the above information, which I have supplied, will be sufficient grounds for revocation of the permit to discharge issued to the above hauler by the Greene County Sanitary Engineering Department and possible legal action against me and/or my employer.

Signature of Hauler _____

**********

FOR STAFF USE ONLY

pH of Waste _____ Waste Accepted _____ Waste Not Accepted _____

Reason for NOT Accepting Waste _____

Comments/Observations _____

Sent to Lab for Further Testing Yes _____ No _____

Signature of Operator Accepting Sludge _____

# INDUSTRIAL PRETREATMENT PROGRAM

## 4.310*GENERAL PROVISIONS

### 4.311* PURPOSE AND POLICY

This Regulation sets forth uniform requirements for all Dischargers into the Greene County wastewater collection and treatment systems, and enables the Board of Greene County Commissioners to protect public health in conformity with all applicable local, state and federal laws relating thereto. The objectives of the Regulation are:

A. To prevent the introduction of pollutants into the Greene County wastewater system which will interfere with the normal operation of the system or contaminate the resulting municipal sludge;

B. To prevent the introduction of pollutants into the Greene County wastewater system which do not receive adequate treatment in the POTW, and which will pass through the system into receiving waters or the atmosphere or otherwise be incompatible with the system;

C. To improve the opportunity to recycle and reclaim wastewater and sludge from the system

This Regulation provides for the control of discharges into the Greene County wastewater system through the enforcement of administrative regulations. This Regulation does not provide for the recovery of operations, maintenance or replacement costs of the POTW or the costs associated with the construction of collection and treatment systems used by Industrial Dischargers, in proportion to their use of the POTW, which are the subject of separate enactment's.

### 4.320*DEFINITIONS

| | |
|---|---|
| Act | The Federal Water Pollution Control Act (33 U.S.C. 1251, et. seq.) as amended. |
| Board | The Board of Greene County Commissioners or its administrative agency, the Greene County Sanitary Engineering Department |
| | Categorical National Pretreatment Standards specifying quantities or concentrations of pollutants or Pretreatment pollutant properties which may be discharged or introduced into a Standards POTW by specific Industrial Dischargers. |
| Discharger/ Industrial Discharger devices | Any non-residential user who discharges an effluent into a POTW by means of pipes, conduits, pumping stations, force mains, constructed drainage ditches, surface water intercepting ditches, intercepting ditches, and all constructed and appliances appurtenant thereto. |
| Indirect Discharge | The discharge or the introduction of non-domestic pollutants from a source regulated under Section 307(b) or (c) of the Act, into a POTW. |
| Industrial Waste | Solid, liquid or gaseous waste resulting from any industrial, manufacturing, trade, or business process or from the development, recovery or processing of natural resources. |
| Interference | A discharge which, alone or in conjunction with a discharge or discharges from other sources, both:<br>1. Inhibits or disrupts the POTW, its treatment processes or operations, or its sludge processes, use or disposal; and |

2. Therefore is a cause of a violation of any requirement of the POTW's NPDES permit (including an increase in the magnitude or duration of a violation) or of the prevention of sewage sludge use or disposal in compliance with the following statutory provisions and regulations or permits issued thereunder (or more stringent state or local regulations): Section 405 of the Clean Water Act, the Solid Waste Disposal Act (SWDA) (including Title II, more commonly referred to as the Resource Conservation and Recovery Act [RCRA], and including state regulations contained in any state sludge management plan prepared pursuant to Subtitle D of the SWDA), the Clean Air Act, the Toxic Substances Control Act, and the Marine Protection, Research and Sanctuaries Act.

New Source — Any building, structure, facility or installation from which there is or may be a discharge of pollutants, the construction of which commenced after the publication of proposed Pretreatment Standards under section 307(c) of the Act which will be applicable to such source if such Standards are thereafter promulgated in accordance with that section, provided that:

1. The building, structure, facility or installation is constructed at a site at which no other source is located; or
2. The building, structure, facility or installation totally replaces the process or production equipment that causes the discharge of pollutants at an existing source; or
3. The production of wastewater generating processes of the building, structure, facility or installation is substantially independent of an existing source at the same site. In determining whether these are substantially independent, factors such as the extent to which the new facility is integrated with the existing plant, and the extent to which the new facility is engaged in the same general type of activity as the existing source should be considered.

NPDES — National Pollutant Discharge Elimination System permit program as administered by the USEPA or Ohio EPA.

O and M — Operation and Maintenance.

Other Wastes — Decayed wood, sawdust, shavings, bark, lime, refuse, ashes, garbage, offal, oil, tar, chemicals and all other substances except sewage and industrial wastes.

Pass Through — A discharge which exits the POTW into waters of the United States in quantities or concentrations which, alone or in conjunction with a discharge or discharges from other sources, is a cause of a violation of any requirement of the POTW's NPDES permit (including an increase in the magnitude or duration of a violation).

POTW — Any sewage treatment works owned and operated by the Board and the sewers and conveyance appurtenances discharging thereto.

Pollutant — Any substance discharged into a POTW or its collection system, listed in Appendices A and B hereto, or any substance which upon exposure to or assimilation into any organism will cause adverse effects such as cancer, genetic mutations or physiological manifestations as defined in standards issued pursuant to Section 307 (a) of the Act.

Pretreatment — The reduction of the amount of pollutants, the elimination of pollutants, or the alteration of the nature of pollutant properties in wastewater to a less harmful state prior to or in lieu of discharging or otherwise introducing such pollutants into a POTW.

| | |
|---|---|
| Sewage | Water-carried human wastes or a combination of water-carried wastes from residence, business buildings, institutions and industrial establishments, together with such ground, surface, storm or other waters as may be present. |
| Sewer | Any pipe, conduit, ditch or other device used to collect and transport sewage or storm water from the generating source. |
| Shall | Is mandatory |
| Significant Industrial User | A. Except as provided in part (b) of this section, the term Significant Industrial User includes:<br>1. All industrial users subject to categorical pretreatment standards; and<br>2. Any other industrial user that: discharges an average of 25,000 gallons per day or more of process wastewater to the POTW; contributes a process waste stream which makes up five percent (5%) or more of the average dry weather hydraulic or organic capacity of the POTW treatment plant; or has a reasonable potential, in the opinion of the Board, to adversely affect the POTW's operation or for violating any pretreatment standard or requirement."<br><br>B. The Board may at any time, on its own initiative or in response to a petition received from an industrial user, determine that a noncategorical industrial user is not a Significant Industrial User if the industrial user has no reasonable potential to adversely affect the POTW's operation or for violating any pretreatment standard or requirement. |
| Slugload | Any pollutant, including oxygen demanding pollutants (BOD, etc.) released in a discharge at a flow rate and/or pollutant concentration which will cause interference with the POTW. |
| Toxic Pollutants | Those substances listed in Appendix A herein. |
| Upset | An exceptional incident in which a Discharger unintentionally and temporarily is in a state of noncompliance with the standards set forth in Appendices A and B hereto due to factors beyond the reasonable control of the Discharger, and excluding noncompliance to the extent caused by operational error, improperly designed treatment facilities, inadequate treatment facilities, lack of preventive maintenance, or careless or improper operation thereof. |
| Wastewater | Industrial waste, or sewage or any other waste including that which may be combined with any ground water, surface water or storm water, that may be discharged to the POTW. |

**4.325*DISCHARGE PERMITS**

The Board will issue permits for industrial wastewater discharge into the Greene County industrial wastewater system. New industrial users shall apply for a permit at least ninety (90) days prior to connecting to the wastewater system.

The Board will issue a permit to the industrial user within thirty (30) days after full evaluation and acceptance of the application and discharger disclosure information.

The permit may be amended at any time by the Board in order to comply with applicable laws and regulations, including categorical standards.

The permit will specify as a minimum wastewater discharge limits, requirements for sampling and inspection facilities, compliance schedules and reporting requirements.

All permits will be issued for a duration listed in the permit and permits are not transferable.

## 4.330*REGULATIONS

### 4.331*GENERAL DISCHARGE PROHIBITIONS

No Discharger shall contribute or cause to be discharged, directly or indirectly, any of the following described substances into the wastewater disposal system or otherwise to the facilities of the Board.

A. Pollutants which create a fire or explosion hazard in the POTW, including, but not limited to, waste streams with a closed cup flashpoint of less than one hundred forty degrees Fahrenheit (140°F) or sixty degrees Centigrade (60°C) using the test method specified in 40 CFR 261.21.

B. Solid or viscous substances which will or may cause obstruction to the flow in a sewer or other interference with the operation of the wastewater system.

C. Any wastewater having a pH less than 5.0 or higher than 10 or having any other corrosive property capable of causing damage or hazard to structures, equipment, or personnel of the system.

D. Any wastewater containing toxic pollutants in sufficient quantity, either singly or by interaction to injure or interfere with any wastewater treatment process, constitute a hazard to humans or animals, or that exceed the limitation set forth in the Categorical Pretreatment Standards set forth in Appendix C hereto. A toxic pollutant shall include but not be limited to any pollutant identified in the Toxic Pollutant List set forth in Appendix A hereto.

E. Any noxious or malodorous liquids, gases, or solids which either singly or by interaction are capable of creating a public nuisance or hazard to life or are sufficient to prevent entry into the sewers for their maintenance and repair.

F. Any substance which may cause the POTW's effluent or treatment residues, sludge's, or scums, to be unsuitable for reclamation and reuse or to interfere with the reclamation process.

G. Any substance which will cause the POTW to violate its NPDES and/or other Disposal System Permits.

H. Any substance with objectionable color not removed in the treatment process, such as, but not limited to, dye wastes and vegetable tanning solutions.

I. Any wastewater having a temperature which will inhibit biological activity in the POTW treatment plant resulting in interference; but in no case, wastewater with a temperature at the introduction into the POTW which exceeds forty degrees Centigrade (40°C) (one hundred four degrees Fahrenheit [104°F]).

J. Any slugload.

K. Any unpolluted water including, but not limited to, non-contact cooling water unless allowed as part of a permit issued by the Board.

L. Any wastewater containing any radioactive wastes or isotopes of such half-life or concentration as exceed limits established by the Board in compliance with applicable state or federal regulations.

M. Pollutants which result in the presence of toxic gases, vapors, or fumes within the POTW in a quantity that may cause acute worker health and safety problems.

N. Discharges of petroleum oil, non-biodegradable cutting oil or products of mineral oil origin are prohibited if discharged in amounts that can pass through or cause interference.

O. Hauled septic or industrial wastes except at locations and at times as designated by the Board. Any removal of manhole lids or other access to the sewer system for the purpose of discharged wastes at times and/or locations other than those designated by the Board or without the expressed permission of the Board, shall be considered a violation and shall be subject to enforcement action including fines and penalties allowed under this Chapter.

## 4.332*LIMITATIONS ON WASTEWATER STRENGTH

### 4.332.1*NATIONAL CATEGORICAL PRETREATMENT STANDARDS

National categorical pretreatment standards as promulgated by the U.S. Environmental Protection Agency (USEPA) pursuant to the Act (and as adopted as Appendix C hereto) shall be met by all Dischargers of the regulated industrial categories. An application for modification of the national categorical pretreatment standards may be considered for submittal to the Regional Administrator by the Board, when the Board's wastewater treatment system achieves consistent removal of the pollutants as defined by 40 CFR 403.7.

### 4.332.2*RIGHT OF REVISION

The Board reserves the right to amend this Regulation to provide for more stringent limitations or requirements on discharges to the POTW where deemed necessary to comply with the objectives set forth in Section 4.311 of this Regulation.

### 4.332.3*DILUTION

No Discharger shall increase the use of potable or process water in any way, nor mix separate waste streams for the purpose of diluting a discharge as a partial or complete substitute for adequate treatment to achieve compliance with the standards set forth in this Regulation.

### 4.332.4*SIGNIFICATE NON-COMPLIANCE

The Board may impose mass limitations on Dischargers who are using dilution to meet the Pretreatment Standards or Requirements of this Regulation or in other cases where the imposition of mass limitations is deemed appropriate by the Board.

At least annually, the Board shall publish a list of all industrial users which at any time during the previous twelve (12) months were in significant noncompliance with applicable pretreatment requirements. For the purposes of this provision, an industrial user is in significant noncompliance if its violations meet one or more of the following criteria:

A. Chronic violations of wastewater discharge limits, defined here as those in which sixty-six percent (66%) or more of all of the measurements taken during a six (6) month period exceed (by any magnitude) the daily maximum limit or the average limit for the same pollutant parameter;

B. Technical Review Criteria (TRC) violations, defined here as those in which thirty-three percent (33%) or more of all of the measurements for each pollutant parameter taken during a six (6) month period equal or exceed the product of the daily maximum limit or the average limit multiplied by the applicable TRC (TRC=1.4 for BOD, TSS, fats, oil and grease, and 1.2 for all other pollutants except pH);

C. Any other violation of a pretreatment effluent limit (daily maximum or longer term average) that the Board determines has caused, alone or in combination with other discharges interference or pass through (including endangering the health of POTW personnel or the general public);

D. Any discharge of a pollutant that has caused imminent endangerment of human health, welfare or to the environment or has resulted in the POTW's exercise of emergency authority to halt or prevent such a discharge;

E. Failure to meet, within ninety (90) days after the schedule date, a compliance schedule milestone contained in a wastewater discharge permit or enforcement order for starting construction, completing construction, or attaining final compliance;

F. Failure to provide, within thirty (30) days after the due date, required reports such as baseline monitoring reports, ninety (90) day compliance reports, periodic self-monitoring reports, and reports on compliance with compliance schedules;

G. Failure to accurately report noncompliance;

H. Any other violation or group of violations which the Board determines will or has adversely affected the operation or implementation of the County's pretreatment program.

**4.332.5*CHANGES, CHARACTERISTICS OR VOLUME OF WASTES**

All dischargers shall promptly notify the Board in advance of any substantial changes in the volume or character of pollutants in their discharge, including the listed or characteristic hazardous wastes for which the discharger has submitted initial notification under 40 CFR 403.12(p).

**4.333*ACCIDENTAL DISCHARGES**

Each Discharger shall provide protection from accidental discharge of prohibited or regulated materials or substances established by this Regulation. Where the Board determines it necessary, facilities to prevent accidental discharge of prohibited materials shall be provided and maintained at the Discharger's cost and expense. Detailed plans showing facilities and operating procedures to provide this protection shall be submitted to the Board for review, and shall be approved by the Board before construction of the facility. No Discharger who discharges to the POTW shall be permitted to introduce pollutants into the system until Accidental Discharge Protection Procedures have been approved by the Board. Review and approval of such plans and operating procedures by the Board shall not relieve the Discharger from the responsibility to modify its facility as necessary to meet the requirements of this Regulation.

Dischargers shall notify the Board immediately upon the occurrence of a “slugload,” or accidental discharge of substances prohibited by this Regulation. The notification shall include location of discharge, date and time thereof, type of waste, concentration and volume, and corrective actions. Any Discharger who discharges a slugload of prohibited materials shall be liable for any expense, loss or damage to the POTW, in addition to the amount of any fines imposed on the Board on account thereof under state or federal law.

Signs shall be permanently posted in conspicuous places on Discharger's premises, advising employees whom to call in the event of a slug or accidental discharge. Employers shall instruct all employees who may cause or discover such a discharge with respect to emergency notification procedure.

**4.340*FEES**

**4.341*PURPOSE**

It is the purpose of this chapter to provide for the payment of fees from Dischargers to the Board's wastewater disposal system, to compensate the Board for the cost of administration of the pretreatment program established herein.

**4.342*CHARGES AND FEES**

A monthly surcharge will be added to the sewer service bill of all Dischargers to pay for program costs. The surcharges shall be as follows:

A. normal strength domestic waste only..... $2.25/month

B. other ..... $4.50/month

The monthly surcharge will be reviewed annually and adjusted upwards or downwards in accordance with Board rate policy.

**4.350*ADMINISTRATION**

**4.351*WASTEWATER DISCHARGERS**

It shall be unlawful to discharge sewage, industrial wastes or other wastes to any sewer within the jurisdiction of the Board, and/or to the POTW without having first complied with the terms of this Regulation.

**4.352*WASTEWATER DISCHARGE DATA DISCLOSURE**

**4.352.1*GENERAL DISCLOSURE**

All Dischargers proposing to connect to or to discharge sewage, industrial wastes and other wastes to the POTW shall comply with all terms of this Section within ninety (90) days after the effective date of this Regulation.

**4.352.2*DISCLOSURE FORMS**

All Dischargers shall complete and file with the Board, a disclosure declaration in the form prescribed by the Board, and accompanied by the appropriate fee. Existing Dischargers shall file disclosure forms within thirty (30) days after the effective date of this Regulation, and proposed new sources shall file their disclosure forms at least ninety (90) days prior to connecting to the POTW. The disclosure to be made by the Discharger shall be made on written forms provided by the Board and shall cover:

A. Disclosure of name, address, and location of the Discharger;

B. Disclosure of Standard Industrial Classification (SIC) number according to the Standard Industrial Classification Manual, Bureau of the Budget, 1972, as amended;

C. Disclosure of wastewater constituents and characteristics including but not limited to those mentioned in this Regulation, as determined by the Board's chemical and biological analyses. Sampling and analysis shall be performed in accordance with procedures established by the U.S. EPA and contained in 40 CFR, Part 136, as amended, and must conform at a minimum to baseline monitoring requirements [40 CFR 403.12(b)] for categorical industries;

D. Disclosure of time and duration of discharges;

E. Disclosure of average daily and instantaneous peak wastewater flow rates, in gallons per day, including daily, monthly and seasonal variations, if any. All flows shall be measured unless other verifiable techniques are approved by the Board due to cost or non-feasibility;

F. Disclosure of site plans, floor plans, mechanical and plumbing plans and details to show all sewers, sewer connections, inspection manholes, sampling chambers and appurtenances by size, location and elevation;

G. Description of activities, facilities and plant processes on the premises including all materials which are or may be discharged to the sewers or treatment works of the Board;

H. Disclosure of the nature and concentration of any pollutants or materials prohibited by this Regulation in the discharge, together with a statement regarding whether or not compliance is being achieved with this Regulation on a consistent basis and if not, whether additional operation and maintenance activities and/or additional pretreatment is required for the Discharger to comply with this Regulation. Sampling requirements must, at a minimum, conform to baseline monitoring requirements [40 CFR 403.12(b)] for categorical industries;

I. Where additional pretreatment and/or operation and maintenance activities will be required to comply with this Regulation, the Discharger shall provide a declaration of the shortest schedule by which the Discharger will provide such additional pretreatment and/or implementation of additional operational and maintenance activities. In accordance with the procedure described in Section 4.360, of this Regulation;

J. Disclosure of each product produced by type, amount, process or processes and rate of production;

K. Disclosure of the type and amount of raw materials utilized (average and maximum per day);

L. All disclosure forms shall be signed;

1. By a responsible corporate officer, if the Industrial User submitting the form required by this section is a corporation. For the purpose of this paragraph, a responsible corporate officer means (i) a president, secretary, treasurer, or vice-president of the corporation in charge of a principal business function, or any other person who performs similar policy or decision-making functions for the corporation or (ii) the manager of one or more manufacturing, production, or operation facilities employing more than 250 persons or having gross annual sales or expenditures exceed $25 million (in second quarter 1980 dollars), if authority to sign documents has been assigned or delegated to the manager in accordance with corporate procedures.
2. By a general partner or proprietor if the Industrial User submitting the form required by this section is a partnership or sole proprietorship respectively.
3. By a duly authorized representative of the individual designated in paragraph L., 1. or L., 2. of this section if:

   (i) The authorization is made in writing by the individual described in paragraph L., 1. or L., 2.;

   (ii) The authorization specifies either an individual or a position having responsibility for the overall operation of the facility from which the Industrial Discharge originates, such as the position of plant manager, operator of a well, or well field superintendent, or a position of equivalent responsibility, or having overall responsibility for environmental matters for the company; and

   (iii) The written authorization is submitted to the Control Authority.
4. If an authorization under paragraph L., 3.of this section is no longer accurate because a different individual or position has responsibility for the overall operation of the facility, or overall responsibility for environmental matters for the company, a new authorization satisfying the requirements of paragraph L., 3. of this section must be submitted to the Control Authority prior to or together with any reports to be signed by an authorized representative.

The Board will evaluate the complete disclosure form and data furnished by the Discharger and may require additional information. Within thirty (30) days after full evaluation and acceptance of the data furnished, the Board shall notify the Discharger of the Board's acceptance thereof. The Board shall have the right to issue control documents to Dischargers with pollutant limits, set monitoring frequencies, reporting requirements, standard conditions and all other applicable provisions of 40 CFR 403.

**4.352.3*STANDARDS MODIFICATION**

The Board reserves the right to amend this Regulation and the terms and conditions hereof in order to assure compliance by the Board with applicable laws and regulations. Within nine (9) months of the promulgation of a National Categorical Pretreatment Standard, this Regulation shall be amended to require compliance by Dischargers with such standards within the time frame prescribed by such standards. All National Categorical Pretreatment Standards adopted after the promulgation of this Regulation shall be part of this Regulation. Where a Discharger, subject to a National Categorical Pretreatment Standard, has not previously submitted a disclosure form as required by Section 4.352.2, the Discharger shall file a disclosure form with the Board within one hundred-eighty (180) days after the promulgation of the Applicable National Categorical Pretreatment Standard by the U.S. EPA. In addition, any Discharger operating on the basis of a previous filing of a disclosure statement, shall submit to the Board within one hundred-eighty (180) days after the promulgation of an applicable National Categorical Pretreatment Standard, the additional information required by paragraphs H. and I. of Section 4.352.2. The Discharger shall be informed of any proposed changes in the Regulation at least thirty (30) days prior to the effective date of change. Any changes or new conditions in the Regulation shall include a reasonable time schedule for compliance.

**4.353*REPORTING REQUIREMENTS FOR DISCHARGER**

**4.353.1*COMPLIANCE DATE REPORT**

A. Within ninety (90) days following the date for final compliance by the Discharger with applicable Pretreatment Standards set forth in this Regulation or ninety (90) days following commencement of the introduction of wastewater into the POTW by a New Discharger, any Discharger subject to this Regulation shall submit to the Board a report indicating the nature and concentration of all prohibited or regulated substances contained in its discharge, and the average and maximum daily flow in gallons. The report shall state whether the applicable Pretreatment Standards or Requirements are being met on a consistent basis and, if not, what additional O & M and/or pretreatment is necessary to bring the discharger into compliance with the applicable Pretreatment Standards or Requirements.

B. Compliance date reports of dischargers shall include a certification statement as follows:
*I certify under penalty of law that this document and all attachments were prepared under my direction or supervision in accordance with a system designed to assure that qualified personnel properly gather and evaluate the information submitted. Based on my inquiry of the person or persons who manage the system, or those persons directly responsible for gathering the information, the information submitted is, to the best of my knowledge and belief, true accurate, and complete. I am aware that there are significant penalties for submitting false information, including the possibility of fine and imprisonment for knowing violations.*
The certification statement shall be signed by a responsible corporate official (if discharger is a corporation), by a general partner (if discharger is a sole proprietorship), or by the duly authorized representative of any of the above provided: 1) the authorization is made in writing by any of the above, 2) specifies either the individual or position having responsibility for overall operations or environmental matters of discharger's facility, and 3) is submitted to the Board.

**4.353.2*PERIODIC COMPLIANCE REPORTS**

A. Any Discharger subject to a Pretreatment Standard set forth in this Regulation, after the compliance date of such Pretreatment Standard, or, in the case of a New Source, after commencement of the discharge to the Board, shall submit to the Board during the months of June and December, unless required more frequently by the Board, a report of the discharges for the preceding six (6) months indicating the nature and concentration, of prohibited or regulated substances in the effluent which are limited by the Pretreatment Standards hereof. In addition, this report shall include a record of all measured or estimated average and maximum daily flows during the reporting period reported in Section 4.353.1 hereof. Flows shall be reported on the basis of actual measurement, provided however, where cost or feasibility considerations justify, the Board may accept reports of average and maximum flows estimated by verifiable techniques. The Board, for good cause shown considering such factors as local high or low flow rates, holidays, budget cycles, or other extenuating factors may authorize the submission of said reports on months other than those specified above.

B. Reports of Dischargers shall contain all results of sampling and analysis of the discharge, including the flow and the nature and concentration, or production and mass where required by the Board. The frequency of monitoring the Discharger shall be as prescribed in the current control document for the Discharger. All analyses shall be performed by the Board, or by Board approved laboratories, in accordance with 40 CFR, Part 136 and amendments thereto. Where 40 CFR, Part 136 does not include a sampling or analytical technique for the pollutant in question, sampling and analysis shall be performed in accordance with the procedures set forth in the EPA publication, Sampling and Analysis Procedures for Screening of Industrial Effluents for Priority Pollutants, April, 1977, and amendments thereto, or with any other sampling and analytical procedures approved by the Administrator of the U.S. EPA.

C. Periodic compliance reports of dischargers shall include a certification statement as follows:
*I certify under penalty of law that this document and all attachments were prepared under my direction or supervision in accordance with a system designed to assure that qualified personnel properly gather and evaluate the information submitted. Based on my inquiry of the person or persons who manage the system, or those persons directly responsible for gathering the information, the information submitted is, to the best of my knowledge and belief, true accurate, and complete. I am aware that there are significant penalties for submitting false information, including the possibility of fine and imprisonment for knowing violations.*
The certification statement shall be signed by a responsible corporate official (if discharger is a corporation), by a general partner (if discharger is a sole proprietorship), or by the duly authorized representative of any of the above provided: 1) the authorization is made in writing by any of the above, 2) specifies either the individual or position having responsibility for overall operations or environmental matters of discharger's facility, and 3) is submitted to the Board.

**4.354*MONITORING FACILTIES**

When required by the Board, a Discharger shall provide at the Discharger's own expense a monitoring facility to allow inspection, sampling, and flow measurement by the Board of each discharge to the POTW. Each monitoring facility shall be situated on the Discharger's premises, except where such a location would be impractical or cause undue hardship on the Discharger, the Board may concur with the facility being constructed in the public street or sidewalk area providing that the facility is located so that it will not be obstructed by landscaping or parked vehicles.
The Discharger shall provide at its own expense an inspection and sampling manhole or structure on each connection to the POTW, with flow measuring and sampling equipment as required by the Board to insure compliance with this Regulation. The manhole or structure shall have an opening of no less than twenty-four inches (24”) diameter and an internal diameter of no less than forty-eight inches (48”). There shall be ample room in or near such sampling facility to allow accurate sampling and preparation of samples for analysis. The facility, sampling, and measuring equipment shall be maintained by the Discharger at all times in a safe and proper operating condition at the expense of the Discharger.
All monitoring facilities shall be constructed and maintained in accordance with all applicable local construction standards and specifications.

**4.355*INSPECTION AND SAMPLING**

The Discharger shall allow the Board or its representatives, upon presentation of credentials of identification, to enter upon the premises of the Discharger at all reasonable hours, for the purposes of inspection, sampling, or records examination. The Board shall have the right to set up on the Discharger's property such devices as are necessary to conduct sampling, inspection, compliance monitoring and/or metering operations.

**4.356*CONFIDENTIAL INFORMATION**

Information and data furnished to the Board with respect to the nature and frequency of discharge shall be available to the public or other governmental agency without restriction unless the Discharger specifically requests and is able to demonstrate to the satisfaction of the Board that the release of such information would divulge information, processes or methods of production entitled to protection as trade secrets or proprietary information of the Discharger.

When requested by a Discharger furnishing a report, the portions of a report which may disclose trade secrets or secret processes shall not be made available for inspection by the public but shall be made available upon written request to governmental agencies for uses related to this Regulation, the National Pollutant Discharge Elimination System (NPDES) Permit, State Disposal System permit and/or the Pretreatment Programs; provided, however, that such portions of a report shall be available for use by the state or any state agency in judicial review or enforcement proceedings involving the Discharger furnishing the Report. Wastewater constituents and characteristics will not be recognized as confidential information.
Information accepted by the Board as confidential, shall not be transmitted to any governmental agency or to the general public by the Board until and unless a ten (10) day notification is given to the Discharger.

## 4.360*ENFORCEMENT

### 4.361*ENFORCEMENT ACTIONS

The Board shall enforce this regulation through administrative procedures and fines; civil litigation; termination of service; and criminal prosecution. The type of enforcement and amount of fines are outlined in a separate enforcement response document and are based on the nature of the violation and the noncompliance activity.

### 4.362*NOTICE OF VIOLATION

Whenever the Board serves or causes to be served a Notice of Violation in accordance with the enforcement response outline, such notice being delivered either personally or by certified or registered mail, return receipt requested, the Discharger shall respond in writing to the Board, within ten (10) days of the date of receipt of the notice, advising of its position with respect to the allegations listed in the Notice of Violation. Within twenty (20) days of the date of receipt of notice, the parties shall, if necessary, establish a plan for the satisfactory correction thereof.

### 4.363*ADMINISTRATIVE COMPLIANCE ORDER

Whenever the Board serves or causes to be served an Administrative Compliance Order in accordance with the enforcement response outline, such order being delivered either personally or by certified or registered mail, return receipt requested, the Discharger shall respond in writing to the Board within ten (10) days of the date of the receipt of notice, advising of its position with respect to the allegations listed in the Compliance Order. Within twenty (20) days of the date of receipt of the order the parties shall, if necessary, establish a plan for the satisfactory correction thereof.

### 4.364*SHOW CAUSE ORDER

Whenever the Board serves or causes to be served an Administrative Show Cause Order in accordance with the enforcement response outline, such order being delivered either personally or by certified or registered mail, return receipt requested, the Discharger shall appear at a meeting as directed in the order and demonstrate why the Board should not pursue a judicial enforcement action against the Discharger. The notice of the hearing shall be served no less than ten (10) days before the hearing. Service may be made on an agent, officer, or authorized representative of the Discharger. The proceedings at the hearing shall be considered by the Board which shall then enter appropriate orders with respect to the alleged violations of the Discharger. Appeal of such orders may be taken by the Discharger in accordance with local or state law.

### 4.365*EMERGENCY SUSPENSION OF SERVICE – CEASE AND DESIST ORDER

The Board may for good cause shown suspend the wastewater treatment service to a Discharger when it appears to the Board that an actual or threatened discharge presents or threatens an imminent or substantial danger to the health or welfare of persons, substantial danger to the environment, interference with the operation of the POTW, or violate any pretreatment limits imposed by this Regulation. Any Discharger notified of the suspension of the Board's wastewater treatment service shall, within twenty-four (24) hours from notification thereof, cease all discharges. In the event of failure of the Discharger to comply voluntarily with the suspension order within the specified time, the Board shall commence judicial proceedings immediately thereafter to compel the Discharger's compliance with such order. The Board shall reinstate the wastewater
treatment service and terminate judicial proceedings pending proof by the Discharger of the elimination of the non-complying discharge or conditions creating the threat of imminent or substantial danger as set forth above.

**4.366*TERMINATION OF TREATMENT SERVICE**
The Board may seek to terminate the wastewater treatment service in accordance with the guidelines of the enforcement response outline.

**4.367*JUDICIAL PROCEEDINGS**
Following the entry of any order by the Board and in accordance with the enforcement response outline, the Attorney for the Board may, following the authorization of such action by the Board, commence action for appropriate legal and/or equitable relief in the appropriate local court.

**4.368*RIGHT OF APPEAL**
Any Discharger or any interested party shall have the right to request in writing an interpretation or ruling by the Board on any matter covered by this Regulation and shall be entitled to a prompt written reply. In the event that such inquiry is by a Discharger and deals with matters of performance or compliance with this Regulation for which enforcement activity relating to an alleged violation is the subject, receipt of a Discharger's request, shall stay all enforcement proceedings pending receipt of the aforesaid written reply. Appeal of any final judicial order entered pursuant to this Regulation may be taken in accordance with local and state law.

**4.370*PENALTIES**

**4.371A* CIVIL PENALTIES**
Any Discharger who is found to have violated an Order of the Board or who has failed to comply with any provision of this Regulation, and the regulations, or rules of the Board, or orders of any court of competent jurisdiction (or permits issued hereunder), may be subjected to the imposition of a civil penalty of $1,000/day for each violation or day of a continuing violation.

**4.371B*ADMINISTRATIVE PENALTIES**
Any Discharger to the sanitary sewer system who is found to have violated the terms and conditions of an Industrial Pretreatment permit or failed to comply with any provision of this regulation and the regulations, rules, or Orders of the Board (or permits issued hereunder), may be subjected to the imposition of Administrative Penalties. The citation for such Administrative Penalties will be issued by the Greene County Sanitary Engineer. Failure to pay penalties in a timely fashion may result in the penalties being added to the discharger's sewer bill. In severe violations, these penalties may be levied in addition to other penalties provided for in this section. Such penalties shall be in accordance with the following schedule:

**VIOLATION** **FINE**

SUBMISSION OF SELF-MONITORING REPORT

°30 days late (without notice).....$ 100
°each additional day (without notice).....$ 10

**VIOLATION**
**FINE**

DISCHARGES

°Discharge of slug load which impacts treatment plant or sewer operations...$ 500

°Discharge resulting in violation(s) of the wastewater treatment plant effluent permit limit(s) as defined by the OEPA NPDES permit.....$1000

°Discharge of constituents which results in any *significant noncompliance* as defined in Section 4.332.4 A-H of the Greene County Regulations and Specifications with regard to Industrial Pretreatment Program permit limit(s)

°pH .....$ 250
°heavy metals (each violation).....$ 500

In the event that a non-compliant discharge or violation results in an increased cost of treatment, disposal or cleanup, Administrative Penalties shall be sufficient to defray the actual costs incurred by the County.

**4.372*RECOVERY OF COSTS INCURRED BY THE BOARD**

Any Discharger violating any of the provisions of this Regulation, or who discharges or causes a discharge producing a deposit or obstruction, or causes damage to or impairs the Board's wastewater disposal system shall be liable to the Board for a fine of $100 for each discharge or for each day of a continuing discharge and any other expense, loss, or damage caused by such violation or discharge. The Board shall bill the Discharger for the costs incurred by the Board for any cleaning, repair, or replacement work caused by the violation or discharge. Refusal to pay the assessed costs shall constitute a violation of this Regulation enforceable under the provisions of Section 4.360, et. seq., of this Regulation.

**4.373*FALSIFYING INFORMATION**

Any person who knowingly makes any false statement, representation or certification in any application, record, report, plan or other document filed or required to be maintained pursuant to this Regulation, or who falsifies, tampers with, or knowingly renders inaccurate any monitoring device or method required under this Regulation, shall, upon conviction, be punished by the imposition of a civil penalty of not more than $1,000 for each violation, or day of a continuing violation, or by imprisonment for not more than six (6) months, or by both.

**4.38* RECORDS RETENTION**

All Dischargers subject to this Regulation shall retain and preserve for no less than three (3) years, any records, books, documents, memoranda, reports, correspondence and any and all summaries thereof, relating to monitoring, sampling and chemical analyses made by or in behalf of a Discharger in connection with its discharge. All records which pertain to matters which are the subject of Administrative Adjustment or any other enforcement or litigation activities brought by the Board pursuant hereto shall be retained and preserved by the Discharger until all enforcement activities have concluded and all periods of limitation with respect to any and all appeals have expired.

**4.390*SEVERABILITY**

If any provision, paragraph, word, section or chapter of this Regulation is invalidated by any court of competent jurisdiction, the remaining provisions, paragraphs, words, sections, and chapters shall not be affected and shall continue in full force and effect.

# A P P L I C A T I O N

## To Discharge Industrial Wastewater to Greene County Publicly Owned Treatment Works

As principal executive official and authorized representative for (Name and Address of Discharger), I hereby make application to discharge industrial wastewater into the Greene County Publicly Owned Treatment Works.

Said discharge shall be in accordance with the information provided on the Disclosure Form attached, and in compliance with the Greene County Industrial Pretreatment Regulations, as amended.

WITNESSES:

_____

_____

NAME AND TITLE OF PRINCIPAL EXECUTIVE OFFICIAL

_____

_____

_____
Date

STATE OF OHIO: SS

Be it remembered, that on this _____ day of _____, 20_____ before me, a Notary Public in and for said state, personally appeared _____, and acknowledged the signing of the foregoing instrument to be _____ voluntary act and deed.

SEAL

_____
Notary Public, State of Ohio
My Commission Expires

# GREENE COUNTY
# INDUSTRIAL PRETREATMENT PROGRAM
# DISCHARGER DISCLOSURE FORM

## ***I. GENERAL INFORMATION***

A. Discharger Name: _____
B. Discharger Address: _____
C. Mailing Address (if different): _____
D. Telephone No.: _____
E. Authorized Representative: _____

F. Products/Services Produced

| | Type | Amount Ave. Day | Amount Max. Day |
|---|---|---|---|
| 1. | | | |
| 2. | | | |
| 3. | | | |
| 4. | | | |
| 5. | | | |

Attach additional sheet(s) if necessary.

G. Standard Industrial Classification Code(s): _____ _____

_____ _____

H. Production/Operation schedule for each type product/service produced

| Day | l | 2 | 3 | 4 | 5 |
|---|---|---|---|---|---|
| Sunday | _____ | _____ | _____ | _____ | _____ |
| Monday | _____ | _____ | _____ | _____ | _____ |
| Tuesday | _____ | _____ | _____ | _____ | _____ |
| Wednesday | _____ | _____ | _____ | _____ | _____ |
| Thursday | _____ | _____ | _____ | _____ | _____ |
| Friday | _____ | _____ | _____ | _____ | _____ |
| Saturday | _____ | _____ | _____ | _____ | _____ |

Attach additional sheet(s) if necessary

I. If production/operation is seasonal, indicate scheduled shutdowns and peak production periods

| Product/Service | Scheduled Shutdowns | Peak Production Period(s) |
|---|---|---|
| 1. | | |
| 2. | | |
| 3. | | |
| 4. | | |
| 5. | | |

Attach additional sheet(s) if necessary

J. Are there plans for expanding operations at this location? If so, please provide a brief description:

_____

_____

_____

K. Raw materials used

| Type | Amount Ave. Day | Amount Max. Day |
|---|---|---|
| 1. | | |
| 2. | | |
| 3. | | |
| 4. | | |
| 5. | | |

Attach additional sheet(s) if necessary

L. Catalysts/intermediates used

| Type | Amount Ave. Day | Amount Max. Day |
|---|---|---|
| 1. | | |
| 2. | | |
| 3. | | |
| 4. | | |
| 5. | | |

Attach additional sheet(s) if necessary

M. Residuals produced

| Type | Amount Ave. Day | Amount Max. Day |
|---|---|---|
| 1. | | |
| 2. | | |
| 3. | | |
| 4. | | |
| 5. | | |

Attach additional sheet(s) if necessary

## ***II. WATER SUPPLY INFORMATION***

A. Water Sources (e.g., wells, surface water, public system, etc.)

| Source | Quantities (Gal/Year) |
|---|---|
| 1. | |
| 2. | |
| 3. | |

B. Water Treatment

| Treatment Process | Chemicals Used |
|---|---|
| 1. | |
| 2. | |
| 3. | |

C. Water Use

| Use | Quantity (Gal/Year) |
|---|---|
| 1. In product | |
| 2. Processes | |
| 3. Sanitary facilities | |
| 4. Boiler feed | |
| 5. Cooling water | |
| 6. Other (specify) | |

## ***III. WASTEWATER INFORMATION***

A. Wastewater Disposal

| Wastewater Source | Quantity (Gal/Year) | Where Disposed |
|---|---|---|
| _____ | _____ | _____ |
| _____ | _____ | _____ |
| _____ | _____ | _____ |
| _____ | _____ | _____ |
| _____ | _____ | _____ |

B. Connections to public sewer
(Attach and refer to site, floor, mechanical and plumbing plans showing each connection)

_____

_____

_____

_____

_____

For each connection to the public sewer, complete and attach a separate "public sewer discharge information sheet"

C. Is there a spill prevention control and countermeasure plan in effect for this plant? _____

_____

# PUBLIC SEWER DISCHARGE INFORMATION

Public Sewer Discharge No. _____

1. Quantity of discharge: _____ gallons per year
2. Is discharge to wastewater sewer: Intermittent? _____; Steady? _____
3. If intermittent, describe schedule as fully as possible including average daily flow rates, peak rates, time and duration of discharge, etc.:

   _____
   _____
   _____
   _____

4. Discharge Quality:

| Parameter | Mg/l | Quality lbs/day | Other Units (specify) |
|---|---|---|---|
| BOD | ____ | _____ | _____ |
| Suspended Solids | ____ | _____ | _____ |
| Oil & Grease | ____ | _____ | _____ |
| Ammonia, As N | ____ | _____ | _____ |
| pH | ____ | _____ | _____ |
| Phosphorus, as Total P | ____ | _____ | _____ |
| Temperature | ____ | _____ | _____ |

If discharge includes any of the parameters listed on the reverse side of this form, identify them below and provide quality information.

| Parameter | Mg/l | Quality lbs/day | Other Units (specify) |
|---|---|---|---|
| _____ | _____ | _____ | _____ |
| _____ | _____ | _____ | _____ |
| _____ | _____ | _____ | _____ |
| _____ | _____ | _____ | _____ |

Describe source of above data by date, method of collection and analysis, and laboratory conducting analyses:

_____
_____

D. Describe any wastewater treatment equipment or pretreatment equipment in use: _____

_____

E. Is this plant subject to an existing Federal Pretreatment Standard? _____

_____

F. If so, are Pretreatment Standards being met on a consistent basis? _____

_____

G. Are additional pretreatment facilities and/or operation and maintenance required to meet Pretreatment Standards?

_____

H. If additional pretreatment and/or operation and maintenance are required; list the schedule by which they will be provided: _____

_____

I. What are the characteristics of the residuals (e.g. sludge) generated from the pretreatment facility?

| | | |
|---|---|---|
| Quantity: | | _____ gallons per day |
| | | _____ lbs/day |
| | | _____ dry volume, cu. ft. |
| Moisture Content: | | _____ percent (%) |
| Type | Biologic | _____ (Y/N) |
| | Inert | _____ (Y/N) |
| | Toxic | _____ (Y/N) |

J. How do you currently dispose of the pretreatment residuals? Check one or more.

| | |
|---|---|
| Public sewer | _____ |
| Storm sewer | _____ |
| Haul to landfill | _____ located at _____ |
| Hire private contractor | _____ |

K. If any process wastes are drummed and stored or hauled from this facility, describe the waste and the manner in which it is disposed. _____

_____

_____

1. Acenapthene
2. Acrolein
3. Acrylonitrile
4. Benzene
5. Benzidine
6. Carbon tetrachloride (tetrachloromethane)
7. Chlorobenzene
8. 1,2,4-Trichlorobenzene
9. Hexachlorobenzene
10. 1,2-Dichloroethane
11. 1,1,1-Trichloroethane
12.Hexachlorobenzene
13. 1,1-Dichloroethane
14. 1,1,2-Trichloroethane
15. 1,1,2,2-Tetrachloroethane
16. Chloroethane
17. Bis(chloromethyl)ether
18. Bis(2-Chloroehtyl)ether
19. 2-Chloroehtyl vinyl ether (mixed)
20. 2-Chloronaphthalene
21. 2,4,6-Trichlorophenol
22. Parachlorometacresol
23. Chloroform (trichloromethane)
24. 2- Chlorophenol
25. 1,2-Dechlorobenzene
26. 1,3-Dichlorobenzene
27. 1,4-Dichlorobenzene
28. 3,3-Dichlorebenzene
29. 1,1-Dichloroethylene
30. 1,2-Trans-dichloroethylene
31. 2,4-Dichlorophenol
32. 1,2-Dichloropropane
33. 2,4-Dimethylphenol
34. 2, 4-Dinitrotoluene
35. 2,6-Dinitrotoluene
36. 1,2-Diphenythydrazine
37. Ethylbenzene
38. Fluoranthene
39. 4-Chlorophenyl phenyl ether
40. 4-Bromophenyl phenyl ether
41. Bis (2-chloroisopropyl) ether
42. Bis (2-chloroethoxy) methane
43. Methylene chloride (dichloromethane)
44. Methyl chloride (chloromethane)
45. Methyl bromide
46. Bromoform (tribromomethane)
47. Dichlorobromomethane
48. Trichlorofluoromethane
49. Dichlorodifluoromethane
50. Chlorodibromomethane
51. Hexachlorobutadiene
52. Hexachlorocyclopentadiene
53. Isophorone
54. Naphthalene
55. Nitrobenzene
56. 2-Nitrophenol
57. 4-Nitrophenol
58. 2,4-Dinitrophenol
59. 4,6-Dinitro-o-cresol
60. N-nitrosodimethylamine
61. N-nitrosodiphenylamine
62. N-nitrosodi-n-propytamine
63. Pentachlorophenol
64. Phenol (4APP method)
65. Bis(2-ethythexyl)phthalate
66. Butyl Benzyl phthalate
67. Di-n-butyl phthalate
68. Di-n-octyl phthalate
69. Diethyl phthalate
70. Dimethyl phthalate
71. Benzo(a)anthracene(1,2-benzanthracene)
72. Benzo(a)pyrene(3,4-benzopyrene)
73. 3,4-Benzofluoranthene
74. Benzo(k)fluoranthane(11,12-benzofluoranthene)
75. Chrysene
76. Anthracene
77. Benzo(ghi)perylene(1,22-benzoperylene)
78. Fluorene
79. Phenanthrene
80. Dibenzo (a,h)anthracene
81. Indeno(1,23-cd)pyrene
82. Pyrene
83. Tetrachloroethylene
84. Toluene
85. Trichloroethylene
86. Vinyl chloride(chloroethylene)
87. Aldrin
88. Dieldrin
89. Chlordane(tech. mixture & metabolites)
90. 4,4’-DDT
91. 4,4’-DDE(p.p’DDX)
92. 4,4-DDD(p.p’TDE)
93. Alpha-endosulfan
94. Beta-endolsulfan
95. Endosulfan sulfate
96. Endrin
97.Endrin Aldehyde
98. Heptachlor
99. Heptachlor expoxide
100. Alpha-BHC
101. Beta-BHC
102. Gamma-BHC (lindane)
103. Delta-BHC
104. PCB-1242(Aroclor1242)
105. PCB-1254(Aroclor 1254)
106. PCB-1221(Aroclor 1221)
107. PCB-1232 (Aroclor 1232)
108. PCB-1248(Aroclor 1248)
109. PCB-1260(Aroclor 1260)
110. PCB-1016(Aroclor 1016
111. Toxaphene
112. Antimony(Total)
113. Arsenic(Total)
114. Asbestos(Fibrous)
115. Beryllium(Total)
116. Cadmium(Total)
117. Chromium(Total)
118. Copper(Total)
119. Lead(Total)
120. Mercury(Total)
121. Nickel(Total)
122. Selenium(Total)
123. Silver(Total)
124. Thallium(Total)
125. Zinc(Total)
126. 2,3,7,8-Tetrachlorodibenzo-p-dioxin(TCDD)

IV. CERTIFICATION

We, the undersigned, hereby certify that the preceding information is complete and accurate to the best of our knowledge, under penalty of law.

WITNESS

_____

_____

PRINCIPAL EXECUTIVE OFFICER

_____

_____

DISCHARGER'S ENGINEER

_____

STATE OF OHIO: SS

Before me, the undersigned, a Notary Public in and for the state of Ohio, personally appeared

_____

_____

and acknowledged the signing of the foregoing instrument to be their voluntary act and deed.

_____
Notary Public, State of Ohio
My Commission Expires

# SECTION 5

## 5*PROCEDURES AND PERMITS

### 5.01*PERMITS

All water taps, sewer taps, extensions or any construction that involves water or sewage works which will become part of, utilization of, be tapped into, the existing systems, require the securing of permits from the Sanitary Engineering Department with payment being made by check or cash at the time of issuance. Information on permit fees is available at the Sanitary Engineering Department office.

A. Permits for use of sanitary sewer or water lines in recorded sections of newly developed areas may not be obtained until final inspection and approval of this construction by the Sanitary Engineering Department.

B. Permits shall be kept and displayed at the construction site at all times while work is still in progress.

C. The issuance of a permit to tap into a sewer or water line by the Sanitary Engineering Department does not relieve the permit holder of the responsibility of securing permits from the proper governing agencies for permission to perform work in public or private rights-of-way that are involved.

### 5.02*CONSTRUCTION

A. GENERAL RULES

No sewerage or water works construction will be started until these steps have been completed in the following order:

1. The plans are approved by the County Commission and the Sanitary Engineering Department.
2. Performance Bonds have been submitted to the County Commission. Bonds are to be one hundred percent (100%) of the estimated cost or a certified check for one hundred percent (100%) of the approved estimate cost.
3. If the improvement is proposed for construction outside of an established County sewer district on an undedicated thorough-fare or right-of-way, the owner shall furnish to the County (before he may take out a permit) a bond fixed by the Board of County Commissioners to insure the dedication of such thoroughfares or furnish right-of-way, deed, or easement in the case of private property, within a time prescribed by the Commissioners. The bond shall also cover assurance of grading, draining and other improvements deemed necessary by the Sanitary Engineering Department and the County Commission.
4. All improvements shall be constructed under the inspection of the Sanitary Engineering Department or a duly authorized representative. Inspection fees will be determined by the Sanitary Engineering Department and must be on deposit before a main line extension (or construction permit) is issued.
5. At least seven (7) days prior to the proposed starting date, the owner or his contractor shall submit a request, in writing, for permission to start construction.

B. INSPECTION

The Owner must give twenty-four (24) hour notice to the Chief Inspector of proceeding so he can be prepared to have the proper number of inspectors on the job. Notification of stoppage of work must also be given. A set of plans with the dated “APPROVED” stamp mark of the Sanitary Engineering Department is evidence on each page must be available at the construction site for review by the inspector.

1. All work must be completed in the presence of and with approval of an inspector.
2. All testing must be done in the presence of an inspector.
3. All materials and workmanship in connection with any service from water main or sewer line to house shall conform to the Specifications of the Sanitary Engineering Department.
4. No water taps will be permitted until the tap into the sanitary sewer is made. If there is no sanitary sewer, no water tap will be permitted until a septic tank permit is obtained from the Greene County Board of Health.
5. No connection shall be made to any sanitary sewer or water line or repair or removal thereof or any excavation thereof without a permit from the Sanitary Engineering Department.

6. If the Sanitary Engineering Department deems that any work improper, it may order all work stopped. Work shall not proceed until the owner has received written permission from the Sanitary Engineering Department.
7. If any change or modification is deemed necessary in the plans during construction, the Sanitary Engineering Department determines whether such change or modification must be re-submitted for approval on revised plans.
8. All work and materials shall adhere to the Specifications of the Sanitary Engineering Department.
9. If any plumber or contractor shall neglect or refuse to abide by these Rules and Regulations, the Sanitary Engineering Department may cause such work to be done and charge the plumber or contractor. Unless such charges are paid, this matter shall be considered in issuing further permits and awarding future projects to the Contractor.
10. After construction is completed, all sewer mains, water mains and appurtenances connected to the County system will become the sole property of the County.
11. Only if sanitary sewerage works and water works and appurtenances are constructed in a dedicated right-of-way or easement will they be maintained by the County.
12. No provision in this article shall be so construed as to relieve a person, firm or corporation, either owner or agent, of furnishing all private engineering services necessary in connection with the improvements.

# SECTION 6

## 6*DEVELOPMENT PROCEDURES

### 6.01*SANITARY SEWER AND WATER SERVICE REQUEST

When sanitary sewer and water is required to serve a tract of ground, the following procedures must be followed:

A. A preliminary plan for the ultimate area to be developed shall be submitted on AutoCAD Rel. 12, 13 or 14.

1. The preliminary plan shall show the lot layout and over-all distribution system (for water) and collection system (for sanitary sewer) including connections to existing utilities systems, sizes of proposed water and sewer lines and a vicinity map.
2. The size of the preliminary plans shall be in multiples of six inches (6”) and shall not exceed 36” x 42.”
3. The scale for the preliminary plans shall be either 1” = 100' or 1” = 200'.
4. The preliminary plans shall show existing contours with intervals of five feet (5') where the slope is greater than ten percent (10%), two feet (2') where the slope is less than ten percent (10%), and one foot (1') where the slope is flat.
5. The preliminary plans shall be revised to “as-built” conditions with the completion of each section and re-submitted with the request for approval of each additional section with previous sections outlined and noted.
6. In order to provide increased reliability of service and reduce head loss, dead ends shall be minimized by making appropriate tie-ins whenever practical.

B. A minimum of three (3) sets of construction plans, accompanied by the design computation sheets, shall be submitted for the approval of and retained by the Sanitary Engineering Department. Additional copies for the Ohio EPA, the Contractor, the developer's files, etc., should be submitted for marking with the dated “APPROVED” stamp of the Sanitary Engineering Department.

C. Oversize facilities as required by the Master Plan shall be installed by the Developer.

D. The minimum water line size on which the County will participate in cost is 16 inches in diameter. The minimum sewer line size in which the County will participate in cost is fifteen inches (15”) in diameter. The County shall reimburse the developer the following amounts for oversized lines where development is reasonably close to the central system and by a method to be determined by the Board of County Commissioners where development is not reasonably close to the central system:

WATER

| Water Lines | Cost Per Foot |
|---|---|
| 16” | $12.00 per foot |
| 20” | $17.00 per foot |
| 24” | $22.00 per foot |

| Valves & Boxes | Cost Each |
|---|---|
| 16” | $770 Each |
| 20” | $1,320 Each |
| 24” | $1,820 Each |

SEWER

| Sewer Lines | Cost Per Foot |
|---|---|
| 15” | $1.50 per foot |
| 18” | $3.00 per foot |
| 21” | $5.50 per foot |
| 24” | $9.00 per foot |
| 27” | $11.00 per foot |
| 30” | $13.00 per foot |
| 33” | $20.00 per foot |
| 36” | $24.00 per foot |

| Manholes | Cost Each |
|---|---|
| 15” | $5 Each |
| 18” | $15 Each |
| 21” | $400 Each |
| 24” | $400 Each |
| 27” | $400 Each |
| 30” | $400 Each |
| 33” | $400 Each |
| 36” | $400 Each |

E. Facilities shall be installed by the Developer as required by the County in order to provide access to such facilities by adjacent properties without having to enter upon the premises of the development. The developer must extend water/sewer facilities to the public right-of-way/easement so that other users will have access.

F. Tap-in permits will be issued upon release of seventy-five percent (75%) of the performance bond.

G. Persons requesting water and/or sewer extension shall be required to extend the water and/or sewer a minimum distance of one-half (1/2) of the frontage of the property on the right-of-way or easement containing the main line.

**H. All water mains shall be looped. Dead-end water mains in excess of 300 feet require special approval from the owner.**

I. Minimum sized water mains installed in Greene County systems shall be 8” diameter. 6” diameter water mains may be allowed (at the discretion of the Sanitary Engineer) in order to eliminate dead-ends. No taps will be allowed off the 6” inch water mains in these “looped” situations.

## 6.02*BONDS, BOND RELEASE REQUIREMENTS AND OVERSIZE REIMBURSEMENT

A. Required easements shall be executed and submitted and shown on drawings. These instruments must be recorded prior to one hundred percent (100%) bond release.

B. A Performance Bond, Certified Check or Irrevocable Letter of Credit for one hundred percent (100%) of Engineer's estimate or executed contract for construction, whichever is greater as approved by the Sanitary Engineering Department, shall be posted with the Greene County Planning Department subsequent to approval and prior to the issuance of permits.

C. Reduction of Performance Bond, Cash deposit, or irrevocable letter of credit:

1. May be requested upon completion of twenty-five percent (25%), fifty percent (50%), and seventy-five percent (75%) of required improvements. Such reductions shall require certification of satisfactory completion by the Greene County Sanitary Engineer.

2. Reduction of seventy-five percent (75%) of the surety, at a minimum requires:

a) contractor request for seventy-five percent (75%) release.
b) installation of sanitary sewer mains, service laterals, and appurtenances.
c) sanitary sewers must be cleaned and televised (videotaped) by the developer or his representative. Greene County Sanitary Engineering Department inspector to witness cleaning and televising activities. Greene County Sanitary Engineering Department shall receive a copy of the videotape for review and approval. Videotape shall become the property of Greene County Sanitary Engineering Department.
d) sanitary sewers leakage tested and approved.
e) manholes to surface grade and proper depth. Manholes shall remain at surface grade and accessible from seventy-five percent (75%) through one hundred percent (100%) bond release. Contractor to be liable for any and all damages arising from situations where manholes are not kept at surface grade (manhole covers paved over--castings/frames not raised to grade, etc.).
f) manhole castings mortared and clean.
g) engineer's certification of sanitary sewer grades and inverts.
h) installation of water mains, service laterals and appurtenances.
i) water mains and service laterals leakage tested, disinfected and approved.
j) valves and fire hydrants tested and operable. Valves shall remain accessible from seventy-five percent (75%) through one hundred percent (100%) bond release. Contractor to be liable for any and all damages arising from situations where valves are not kept at surface grade (valve boxes paved over-valve box not raised to current surface grade, etc.).
k) quit claim deeds and/or easements conveyed and recorded.
l) service lateral location drawings submitted.
m) “as-built” drawings submitted and approved (in AutoCAD Rel 12, 13 or 14 Format) to include 200 and 1000 scale updated preliminary.

D. One Hundred Percent (100%) Bond Release requires:

1. Seventy-five percent (75%) bond reduction.
2. other
a) contractor request for one hundred percent (100%) release.
b) completion of all structures and streets.
c) manholes adjusted to final surface grade.
d) valves, fire hydrants and meter pits adjusted to final surface grade.
e) fire hydrants shall be voltage yellow.
f) final construction quantities submitted and approved.
g) revised inspection fees paid.

E. Oversize Reimbursement: After the Bond has been released one hundred percent (100%), a letter requested reimbursement must be submitted along the units originally agreed upon, adjusted to “as-built” quantities.

## 6.03*CONSTRUCTION PLANS - PHYSICAL FORMAT

A. Standard Sheet: Class A 24” x 36.” Profile Engraf plat b 4 x 30 or equivalent.

B. Paper and Ink: India or other reproducible ink on linen cloth or mylar.

C. Lettering: All lettering .125” high or larger.

D. Title Block: 6” x 3” located in lower right hand corner or 2” wide located along the right hand edge of the drawing sheet. Include: Sewer district, plat name, section, engineer’s name, seal, signature, sheet number, number of sheets and scale.

E. Revisions Block: 4” x 3” located directly to left of corner title block or 2” x 3” located directly to the right of the edge style title block.

F. Scale: Horizontal - 1” = 40’ Vertical - 1” = 6’ The scale is to be represented graphically directly to the left of the revisions block.

G. Signature Block (on cover sheet as shown at right): Places for (in order from top to bottom):

1. Board of County Commissioners and Clerk (four spaces).
2. County Sanitary Engineer.
3. County Engineer when on or crossing a County road.
4. Director of water and/or services for other political entities where applicable.
5. The application City or Municipal Engineer when within corporation limits.

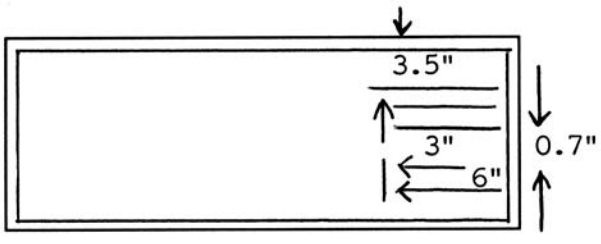


H. A vicinity map shall be provided to show the location of the job.

I. If there are five (5) or more sheets, a cover sheet is required containing the signature block and a key map with sheet reference numbers.

J. Each sheet shall have a readily readable North arrow oriented up and/or to the left.

K. Each set of plans shall contain this note in addition to other applicable General Notes: “All sanitary sewers and/or water lines and appurtenances shall be constructed according to Greene County Sanitary Engineering Department specifications.”

L. Profiles for both sewer and water shall be shown on the same sheet as the plan. The profile shall be below the plan and shall be taken at the pipe centerline or the road centerline if noted. The profile shall be lined up under corresponding points on the plan. The existing and proposed grade profile shall be shown on each profile view. Sanitary sewer profiles shall be split only at manholes; however, if it is absolutely necessary to end a drawing in the middle of a sanitary sewer span, a match line must be used and the lineal feet should relate to the length of span shown on that sheet. Water profiles are only required at points of crossing with other underground utilities and at those locations where the water line is greater or less than four feet six inches (4' 6”) deep.

M. All existing structures in the street or easement shall be shown in both plan and profile. Sizes, location, dimensions and elevations shall be included. These structures include but are not limited to:

1. Gas mains.
2. Electric and telephone conduits.
3. Storm sewers.
4. Sanitary sewer lines.
5. Water lines.
6. Telephone poles.
7. Street lights.
8. All above ground structures which may affect construction.

N. Manholes shall be consecutively numbered from lowest to highest elevation and station numbers shall be noted. Manhole #1 shall be assigned Station No. 0 + 00 and shall be the manhole connected to the existing system. Both manhole and station numbers shall appear on both plan and profile. There shall be no duplication of manhole numbers within a particular development.

O. The length, grade and size of each span of sewer shall appear on the profile.

P. The type of pipe material, joints and strength shall be shown in the profile for both sewer and water, using the ASTM nomenclature.

Q. The location of all special features such as concrete encasements, siphons, elevated sewers and special cross sections shall be shown.

R. Details of all special appurtenances such as manholes, inspection chambers, siphons, regulators, metering devices, elevated sewers, etc., shall be shown.

S. All subdivisions and Plat Book page shall be clearly marked including lot numbers. All properties abutting the improvement shall be shown for full width and depth.

T. The ownership, including Deed Book, page and acreage, of all property not subdivided by a record plat shall be shown on the preliminary plans and cover sheet.

U. All corporation lines with dimensions and other information that will fix the exact location shall be shown on the preliminary plan and cover sheet. Section, Township, Range and USGS Index Number shall be included.

V. Private driveways, lanes and easements with appropriate dimensions shall be shown by dashed lines. **All sanitary sewer easements shall be a minimum of 30' in width (20' if installed in a casing pipe). All water main easements shall be a minimum of 20' in width (15' if installed in a casing pipe).**

W. The location, description and elevation of all benchmarks used in connection with the project shall appear on each appropriate sheet.

X. Test borings shall be located when made.

Y. Proposed lines shall be shown as solid dark lines. Existing lines shall be shown as dashed lines.

Z. Existing or proposed streets and all streams or water surfaces shall be clearly shown. Contour lines at appropriate intervals shall be shown.

**6.04*CONSTRUCTION PLANS – SPECIFICATIONS**

Complete technical specifications for any special construction shall be submitted to the Sanitary Engineering Department. No construction shall begin before these specifications have been approved.

**6.05*CONSTRUCTION PLANS - REVISIONS TO APPROVED PLANS**

Any deviation from approved sanitary sewer or water plans and specifications shall be submitted to and have received approval of the Sanitary Engineering Department before such changes are made. "As-built" plans clearly showing such changes shall be submitted at the completion of the work.

**6.06*CONSTRUCTION PLANS - APPROVAL PERIOD**

Approved plans are only good for one hundred-twenty (120) days, after which time they must be re-submitted for re-approval unless construction has begun.

## 6.07*CONSTRUCTION PLANS - "AS-BUILT" DRAWINGS

A. "As-built" drawings must not have any objects, dimensions, elevations, grades, etc., crossed out. They must be erased from the drawing.

B. All sanitary manholes and water valves must be located with a minimum of two (2) dimensions required on all locations.

C. Plugged ends of sanitary sewer and waterlines with no service lines must be located.

D. All "as-built" witness dimensions are to be measured in feet and tenths of a foot and are not to exceed one hundred feet (100') in length. Dimensions lines shall be shown on drawing except where they would add substantial confusion in interpretation. Written dimensions with an arrow pointing to the valve or sanitary manhole being referred to will then be acceptable. Dimensions shall be from centerline to centerline except for house corners and catch basins.
Written dimensions will be considered at right angles with one another unless noted or shown otherwise.

E. Measurements shall be on the horizontal.

F. Abbreviations will be accepted for the following:

1. Sanitary Manholes .....San. M.H.
2. Catch Basins .....C.B.
3. Curb.....C
4. Fire Hydrant.....F. Hyd.
5. Directions.....N. -S. -E. -W.
6. Ohio Bell Telephone.....O.B.T.
7. Dayton Power and Light .....D.P.L.
8. Property Line .....PL
9. Center Line .....CL
10. Water Main .....Wtr. Mn.
11. Mechanical Joint .....M.J.
12. Gate Valve .....G.V.

G. The following will be required on all "as-built" drawings:

1. Measurements between valves within an intersection. (These dimensions cannot be considered as either of the two (2) required on all locations).
2. Measurements between fire hydrants and fire hydrant valves.
3. Distances between sanitary manholes and between a sanitary manhole and the plugged end of the line are to be shown on the plan.
4. Length of span, grade, size of pipe, type, and invert elevations will be required on the profile:
   a) Length of span may vary ± 1.0' before manhole location in profile must be changed. The dimension, however, must be marked clearly and correctly.
   b) Invert elevations may vary ± 0.25" before main line in profile must be changed. The elevation, however, must be marked clearly and correctly.
5. If a water line is put in the ground more than two (2) feet off centerline of the traveled roadway, it should be shown off the centerline on the "as-built" drawings. If it is within two (2) feet of the centerline it may be drawn as such with the distance off centerline noted.
6. Measurements between laterals and the nearest downstream man-hole for sanitary sewer and the nearest downstream sanitary manhole for water except in special, approved circumstances where the nearest main line water valve or a fire hydrant may be used. Measurements for sanitary sewer laterals shall be from the end of the lateral, and not the tee location, and shall include depth and length.

H. The following is a list of objects that will be acceptable for "as-built" dimension references:

1. Fire Hydrant.
2. Curb (all curb dimensions must be perpendicular to the back of the curb and must not be to any curb or extended curb lines with a radius).
3. Catch Basin
   a) Dimensions are to be to the nearest corner of the steel edge on the street side.

   b) The street and corner on which the catch basin is located must be indicated.
4. Sanitary Manholes.
5. Utility pole (when a dimension to a utility pole is used, the description and number of the pole must be given).
6. House Corner (when a dimension to a house corner is used, the address must be given).
7. Corner of a concrete drive (house number must be given).

**6.08*CONSTRUCTION PLANS - PROCEDURE ON "AS-BUILT" DRAWINGS**

A. "As-built" information and changes will be made in AutoCAD Rel. 12, 13 or 14 construction drawing format (no changes should be needed to open or plot drawings).

B. Two (2) sets of "as-built" paper prints will be submitted to the Sanitary Engineering Department for checking.

C. The Engineer or Developer will be notified of acceptance or corrections by the Sanitary Engineering Department.

D. One (1) set of corrected "as-built" drawings in AutoCAD Rel. 12, 13 or 14 Format will be submitted to the Sanitary Engineering Department on floppy disk(s) for final checking.

E. The Engineer will then be notified of acceptance or corrections by the Sanitary Engineering Department.

## **SECTION 7**

***SEE SCHEDULES POSTED ON THE***

***SANITARY ENGINEERING WEBSITE***

***FOR THE LATEST CHARGES.***

***(www.co.greene.oh.us/sanitary)***

# Regulations and Specifications
# Greene County, Ohio
# PART B - Construction Materials
## SECTION 1

**1*GENERAL**

**1.1*STANDARDS**
All material furnished by the Contractor to be installed on the project shall conform to the minimum requirements of the latest revisions in effect on the date of the Standard Specification published by the described organizations, unless other requirements are stated in these specifications. The Standard Specifications are combined under a single caption, for the sake of brevity, whenever referred to in the specifications, as follows:
American Society of Testing Materials .....ASTM
American National Standards Institute.....ANSI
American Water Works Association .....AWWA
American Concrete Institute .....ACI
American Association of the State Highway Officials.....AASHO
Construction and Materials Specifications of the State of Ohio, Department of Highways..... OHIO CM Federal Specifications.....FED
American Railway Engineering Association.....AREA

**1.2*INSPECTION AND TESTING**
The manufacturer of the specific materials shall establish the necessary quality control and inspection to assure compliance with the individual specification outlined above for the particular material. The manufacturer shall, if required by these specifications, furnish a sworn statement that the inspection of all the specified tests have been made and the results therefore comply with the requirements of the particular Standard specified. Certified copies of such test results shall be furnished by the manufacturer if so stipulated in these specifications.

**1.3*SAMPLES**
The Contractor will be required to furnish, for the approval of the County, samples of any or all materials or equipment he proposed to use if the specifications require that they shall meet certain standards.

No material or equipment of which samples are required to be submitted for approval shall be used on the work until they have been approved by the County.

Samples of materials or equipment submitted for approval shall have a label indicating the material represented, its place or origin, and the name of the producer, the Contractor expecting to use the equipment and the work for which the material will be used. Samples of finished materials shall be marked to indicate where they are required by the drawings and specifications. Each delivery of samples shall be accompanied under separate cover by a letter, in duplicate, from the Contractor, containing a list of samples, as indication of where the materials are intended to be used and the brands of materials and names of the manufacturers.

Approval of any samples shall not be taken in itself to change or modify any specification requirement, for approval shall be only for the characteristics or for the use of the material. After a material has been approved, no change in brand or make will be permitted. Approved samples of hardware in good condition may be suitably marked for identification and later used in the work. Failure of any material to pass these specified tests will be sufficient cause for refusal to consider any further samples of the same brand of that material for use under these specifications. The County, whenever it may deem it necessary, may take test samples from the various materials or equipment delivered to the site of the work by the Contractor. If any such test sample fails to meet the specification requirements, any previous approvals will be withdrawn and such material or equipment shall be subject to removal and replacement by the Contractor with material or equipment meeting the specification requirements.

# SECTION 2

## 2*PRESSURE PIPE

### 2.1*DUCTILE IRON

Ductile iron pipe shall conform to the American National Standards Institute Specifications for "Ductile Iron Pipes Centrifugally Case in Metal Molds for Water or Other Liquids," ANSI A21.51 (AWWA C151).
The wall thickness of the pipe shall be Thickness Class 52, unless otherwise noted on the construction drawings.

### 2.1.1*JOINTS

Mechanical joints, bell and spigot joints and flanged joints for ductile iron pipe in sizes from two inches (2") through forty-eight inches (48") in diameter shall conform to all of the dimensions, shapes, and requirements of ANSI A21.10 (AWWA C110), "Cast Iron Fittings, 2" through 48" for Water and Other Liquids." The mechanical joint shall also conform in all respects to ANSI A21.11 (AWWA C111), "Rubber Gasket Joints for Cast Iron Pressure Pipe and Fittings." Up to seven degrees (7°) angular deflection for six-inch (6") diameter mechanical joint pipe and five degrees (5°) angular deflection for six-inch (6") diameter push-on pipe shall be accommodated without leakage and without decrease in full diameter of pipe.

Push-on joints shall be a single rubber gasket joint designed to be assembled by the positioning of a continuous, molded, rubber ring gasket in an annual, recess in the pipe and forcing of the plain end of the entering pipe into the socket, thereby compressing the gasket radially to the pipe to form a positive seal. The gasket and the annular recess shall be so designed and shaped that the gasket is locked in place against displacement as the joint is assembled. The push-on type joint shall conform to the requirements of ANSI A21.10 (AWWA C110) and ANSI A21.11 (AWWA C111) where applicable.

Where ductile iron pipe with bell and socket type joints are specified, they shall be of the mechanical gland or push-on joint type. Provisions shall be made for longitudinal expansion and contraction with a positive stop against disengagement of the joint. Up to fifteen degrees (15°) angular deflection shall be accommodated without leakage and without decrease in full diameter of pipe.

Mechanical Joint - The mechanical joint shall conform to the requirements of ANSI A21.11 (AWWA C111), "Rubber Gasket Joints for Cast Iron Pressure Pipe and Fittings."
Regulations and Specifications Greene County, Ohio Part B--Construction Materials
Rubber Seal Type Joints (Push-On Joint) - The push-on type joint shall conform to the requirements of ANSI A21.11 (AWWA C111) "Rubber Gasket Joints for Cast Iron Pressure Pipe and Fittings."

### 2.1.2*FITTINGS

Ductile iron fittings in sizes two inches (2") through forty-eight inches (48") for mechanical joints, bell and spigot joints and flange joints shall conform to all the requirements of ANSI A21.10 (AWWA C110), and to the requirements of ANSI A21.11 (AWWA C111), and (AWWA C153/A21.53-88) "Ductile Iron Compact Fittings, three inches (3") through sixteen inches (16") for water and other liquids" for mechanical joints and push-on type joints.

The fittings for use on ductile iron pipe shall be only ductile iron. The fittings larger than twelve inches (12") shall have a pressure rating of one hundred fifty (150) psi unless otherwise shown on the construction drawings.

### 2.1.3*COATING FOR DUCTILE ITON PIPE AND FITTINGS

The ductile iron pipe and ductile iron fittings shall be furnished with cement mortar lining in accordance with ANSI Specification A21.4 (AWWA C104), "Cement Mortar Lining for Cast Iron Pipe and Fittings." The lining will be one-sixteenth inch (1/16") thick for pipe sizes four inches (4") through twelve inches (12") in diameter and three thirty seconds inch (3/32") thick for sizes fourteen inches (14") through twenty-four inches (24") in diameter. A bituminous seal coat shall be applied to the lining surface immediately following the lining operation to prevent loss of moisture and insure proper curing of the cement mortar. The outside of the iron pipe shall be furnished with a protective bituminous coating.

## 2.1.4*ANCHORING ASSEMBLIES

Anchoring assemblies will be required for all fire hydrants and hydrant valves. Anchoring assemblies will be required for setting other valves and special bends, if shown on the construction drawings.

Anchoring assemblies shall consist of two (2) mechanical joint cast iron gland fittings cast integrally with the pipe nipple or with regular anchoring glands cast with the pipe or with a ring gland, which will allow free movement of the standard mechanical joint follower gland.

A mechanical joint anchoring tee may be substituted for the mechanical joint tee and anchoring piece.
Regulations and Specifications Greene County, Ohio Part B--Construction Materials

Special anchoring may be required at other places along the pipe lines. Where the construction drawings call for special anchoring, it shall include the use of mechanical joint fittings, couplings and pipe incorporating approved formed monolithic thrust or anchor blocking, mechanical joint anchoring fittings, couplings and pipe, positively restrained push-on joint type pipe and fittings which allow for deflection at the joint after assembly, the equal of "Push-On Restrained Joint Pipe" manufactured by McWane, Inc., or "TR-Flex Restrained Joint Pipe and fittings" made by U.S. Pipe. Field Lok Gaskets or Mega Lugs restraining systems may be approved at sole discretion of the Greene County Sanitary Engineer.

## 2.2*REINFORCED CONCRETE

Reinforced concrete pressure pipe shall be of the pre-stressed steel cylinder type, conforming in all respects to the AWWA Specification C301, "Reinforced Concrete water Pipe - Steel Cylinder Type, Pre-stressed." This specification covers two (2) types of pre-stressed pipe: a) pipe with steel cylinder lined with a concrete core; and b) pipe with a steel cylinder embedded in a concrete core. The contractor shall supply the type of pipe required for the loading and pressure conditions specified.

The pre-stressed concrete pipe shall be designed to withstand an internal pressure of the magnitude stated on the construction drawings, plus an allowance for water hammer. The allowance for water hammer shall be as stipulated in AWWA C301, "Reinforced Concrete Water Pipe - Steel Cylinder Type, Pre-stressed." The pipe shall also be designed to withstand the external loading as determined from the profile of the line shown on the construction drawings.

The pre-stressed concrete pipe proposed for use shall meet the alignment and grades shown on the construction drawings. All horizontal and vertical curves shall be of sufficiently long radius to complete the installation of the pipe within the indicated right-of-way and to maintain the required depth of excavation as specified and shown on the drawings.

The manufacturer of the pre-stressed concrete pipe shall supply to the County, for approval, the information described in section 1.6.2 of AWWA C301, "Reinforced Concrete Water Pipe - Steel Cylinder Type, Pre-stressed." The manufacturer shall also supply detailed drawings of all special fittings for approval before fabrication.

The construction drawings show the locations of outlets, connections, and special appurtenances to be installed in the pipe line. The manufacturer shall furnish all fittings and special pieces required for closures, curves, bends, branches, manholes, air valves, blow-offs and connections to main line valves and other pipe shown on the construction drawings. The construction drawings will designate the type of joint to be used on the outlets for future mainline connections to the pre-stressed concrete pipe line.

The manufacturer shall provide a service representative to the Contractor to train the construction personnel in the proper method of installing this type of product. Special anchoring may be required at various places on the pipe line. If it is required, it will be shown on the construction drawings. The anchorage shall be made in the form of harnessed joints for the lengths of pipe and fittings, as shown on the construction drawings.

## 2.3*PRESSURE SERVICE LINES

### 2.3.1*GENERAL
The materials for pressure service lines shall meet the following specifications:

### 2.3.2*SERVICE PIPE
Pressure service pipe from the water main to the meter shall not be less than one inch (1") nominal diameter. Pressure service pipe one inch (1") up to and including two-inch (2") nominal diameter shall be copper pipe and shall conform to the dimensions, weights and tolerances stated in Table No. II, ASTM B 88, "Copper Water Tube," "Type K." Sizes greater than two inches (2") nominal diameter shall conform to specification 2.1, "Ductile Iron," Page 3 of this section.

### 2.3.3*CORPORATION STOPS
Corporation stops shall be of cast bronze construction with ground key stops. The inlet thread shall be AWWA C800, Figure 1. The corporation stops shall be the equal of Mueller Company No. H-15008, Ford Meter Box Company No. F-1000, McDonald 4704-B-22 MAC-PAK, Mueller Ball Corporation Stop #B-25008 Compression (Pack Joint), or Ford #FB-1000 Compression (Pack Joint).

### 2.3.4*SERVICE STOPS (CURB STOPS)
Service stops shall be of cast bronze or cast brass construction designed to receive compression copper fittings on both sides. They shall be of the solid tee head type with a "Teflon" coated plug or ball and upper and lower "O" rings for positive pressure sealing without mechanical means. The stops shall have ninety degree (90°) operation and shall be equipped with padlock wings or locking caps. The stops shall be the equal of No. B44-444, as manufactured by the Ford Meter Box Company, McDonald 6104-22 MAC-PAK compression fittings, Mueller Ball Curb Stops #B-25209 Compression (Pack Joint), or Ford #B44-444 Compression (Pack Joint).

### 2.3.5*METER PIT
Meter pit barrels for 5/8" x 3/4" to 1" meters shall be Mid-States Plastics model number MS202448B, sized in accordance with the standard meter pit drawing. The barrel shall have two (2) cut-outs approximately two inches (2") in diameter near the bottom edge on opposite sides to receive the service piping.

Meter pits for 1 1/2" to 2" meters shall be precast reinforced concrete five feet (5') in length with a six-inch (6") poured concrete bottom and an eight-inch (8") thick flat slab top in accordance with the standard meter pit drawing. The barrel shall be completely water-proofed with an approved bituminous coating or "Thoroseal," "Sed-N-Seal," or approved equal. The pit shall have two (2) cut-outs approximately four inches (4") in diameter on opposite sides to receive the service piping. The cut-outs shall be grouted with an approved grout and shall be watertight.

Meter pits for 3" and larger meters shall be precast reinforced concrete constructed in accordance with the standard meter pit drawing. The pit shall be completely waterproofed with an approved bituminous material. The pit shall have two (2) cut-outs to accept the entrance and exit service line piping and "Link-Seal" flexible gasketing material. Steps to be one-inch (1") aluminum bar.

### 2.3.6*METER PIT COVERS
Meter pit covers for meter pits housing 5/8" x 3/4" to 1" meters shall be of the **single** lid type. The top cover and frame shall be of cast iron with an 11 1/2" lid opening. The assembly shall be 9 1/2" in depth with the bottom flange sized to fit on the meter pit barrel. The top lid of the cover shall be furnished with a locking device, which will unlock the lid from the frame and raise the lid at the same time. Lifter-lock bolts shall be forged silicon-bronze. The meter pit cover shall be the equal of No. **A3-T** as manufactured by the Ford Meter Box Company.

Meter pit covers for meter pits housing 1 1/2" to 2" meters shall be square, cast steel, flat slab manhole frames with 3/4" thick solid lid. The surface of the cover shall be flush with the flat slab manhole top. The cover shall be equipped with hinges on one edge, it shall be counterbalanced and it shall have a lifting ring. The cover shall be the equal of Neenah Type R6660-KH with Type "T" hinges and Type "G" lifting handle.

Meter pit covers for meter pits housing 3" and larger meters shall be cast aluminum interior/exterior access doors with an anchor flange around the perimeter. The cover shall be the equal of Bilco Type "JD-2AL" sized to permit easy removal of the meter.

**2.3.7*METER YOKE**

Meter yokes for 5/8" x 3/4" to 1" meters shall be of the riser type with a valve inlet. The body of the yoke shall be cast iron with a brass valve end and a brass lock valve outlet end. The ends shall be connected to the yoke with brass lock nuts. The valve shall be of the inverted key angle type. The yoke shall contain a brass expansion connection to allow for connecting or disconnecting a meter. The inlet and outlet shall be for copper pipe connections. The riser yoke assembly shall be the equal of No. Y502 (for 5/8" x 3/4" meters), No. Y503 (for 3/4" meters) or No. Y504 (for 1" meters) riser yoke assembly manufactured by *(Continued on page B-2-8)*

# GREENE COUNTY SANITARY ENGINEERING DEPARTMENT
## STANDARD INSTALLATION FOR RESIDENTIAL (5/8" x 3/4" METER) WATER SERVICE CONNECTION

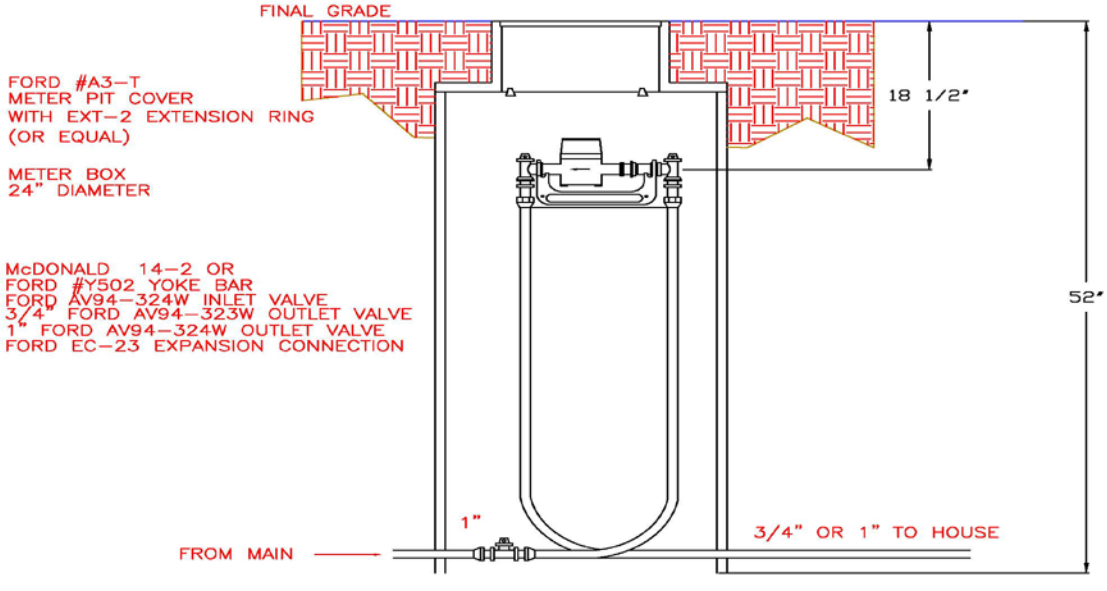


McDonald 6104-22 Compression Mac-Pack or Ford Compression B44-444 or Mueller No. H-1504-1, or approved equal

NOTES:

1. Water meter to be furnished upon request and payment of service connection charge to Greene County Sanitary Engineering Department.
2. Service line from main to yoke assembly inlet (lock) stop to be 1" diameter nominal type "K" copper (or as Greene County Sanitary Engineering Department specification).
3. Service line from yoke assembly outlet stop to be 3/4" or 1" diameter nominal type "K" or "L" copper (or as Greene County Health Department Division of Plumbing Inspection specification).

# GREENE COUNTY SANITARY ENGINEERING DEPARTMENT
## STANDARD INSTALLATION FOR RESIDENTIAL FULL 3/4" METER WATER SERVICE CONNECTION

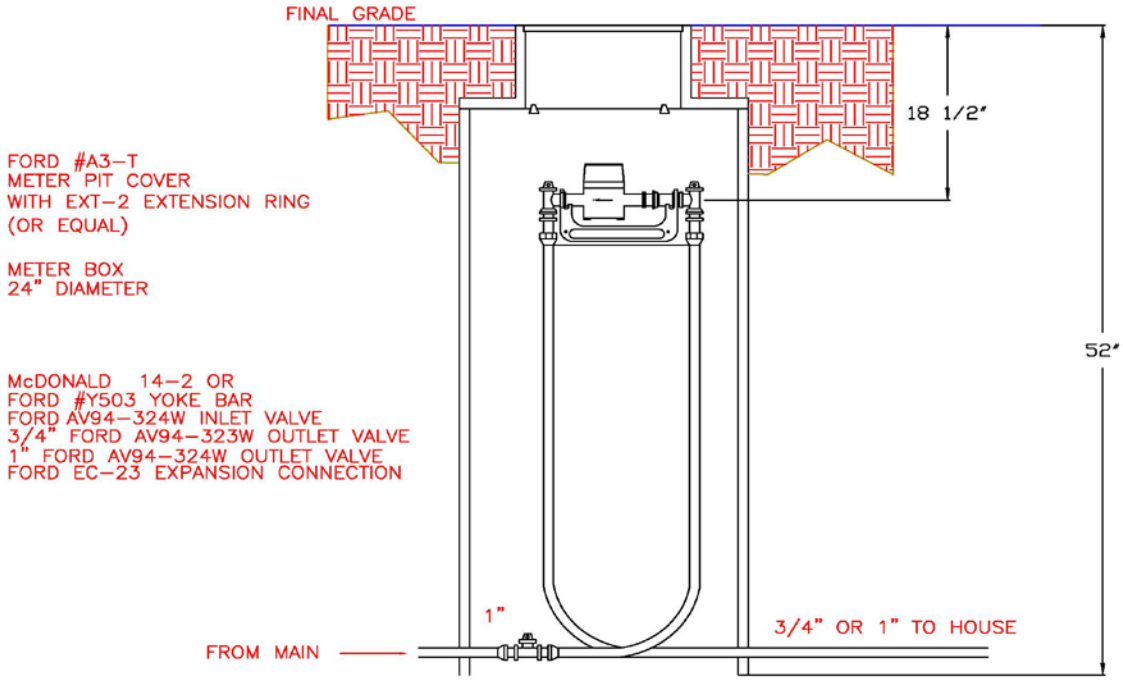


McDonald 6104-22 Compression Mac-Pack or Ford Compression B44-444 or Mueller No. H-1504-1, or approved equal

NOTES:

1. Water meter to be furnished upon request and payment of service connection charge to Greene County Sanitary Engineering Department.
2. Service line from main to yoke assembly inlet (lock) stop to be 1" diameter nominal type "K" copper (or as Greene County Sanitary Engineering Department specification).
3. Service line from yoke assembly outlet stop to be 3/4" or 1" diameter nominal type "K" or "L" copper (or as Greene County Health Department Division of Plumbing Inspection specification).

# GREENE COUNTY SANITARY ENGINEERING DEPARTMENT
## STANDARD INSTALLATION FOR RESIDENTIAL 1" METER WATER SERVICE CONNECTION

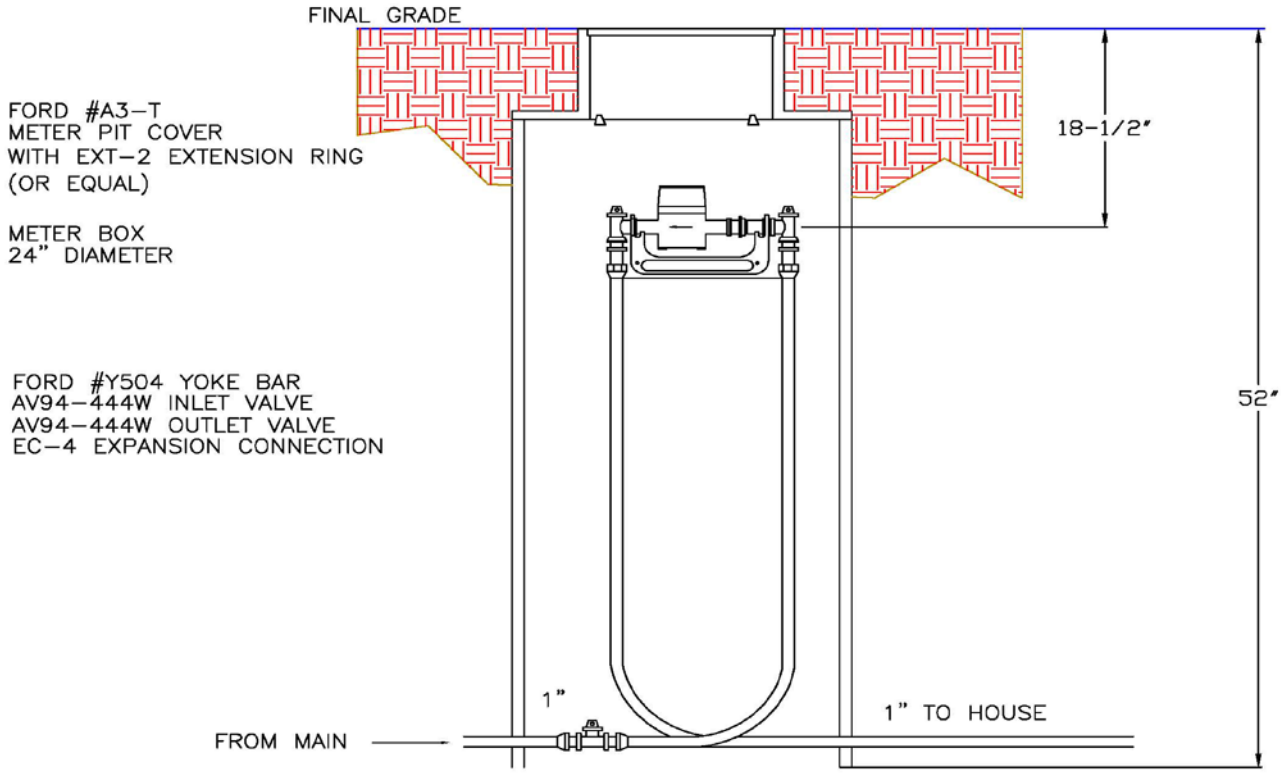


McDonald 6104-22 Compression Mac-Pack or Ford Compression B44-444 or Mueller No. H-1504-1, or approved equal

NOTES:

1. Water meter to be furnished upon request and payment of service connection charge to Greene County Sanitary Engineering Department.
2. Service line from main to yoke assembly inlet (lock) stop to be 1" diameter nominal type "K" copper (or as Greene County Sanitary Engineering Department specification).
3. Service line from yoke assembly outlet stop to be 1" diameter nominal type "K" or "L" copper (or as Greene County Health Department Division of Plumbing Inspection specification).

# GREENE COUNTY SANITARY ENGINEERING DEPARTMENT
## "MODEL" PUBLIC WATER SUPPLY CONNECTION FOR IRRIGATION PURPOSE ONLY. (INSTALL IN EXISTING METER PIT)

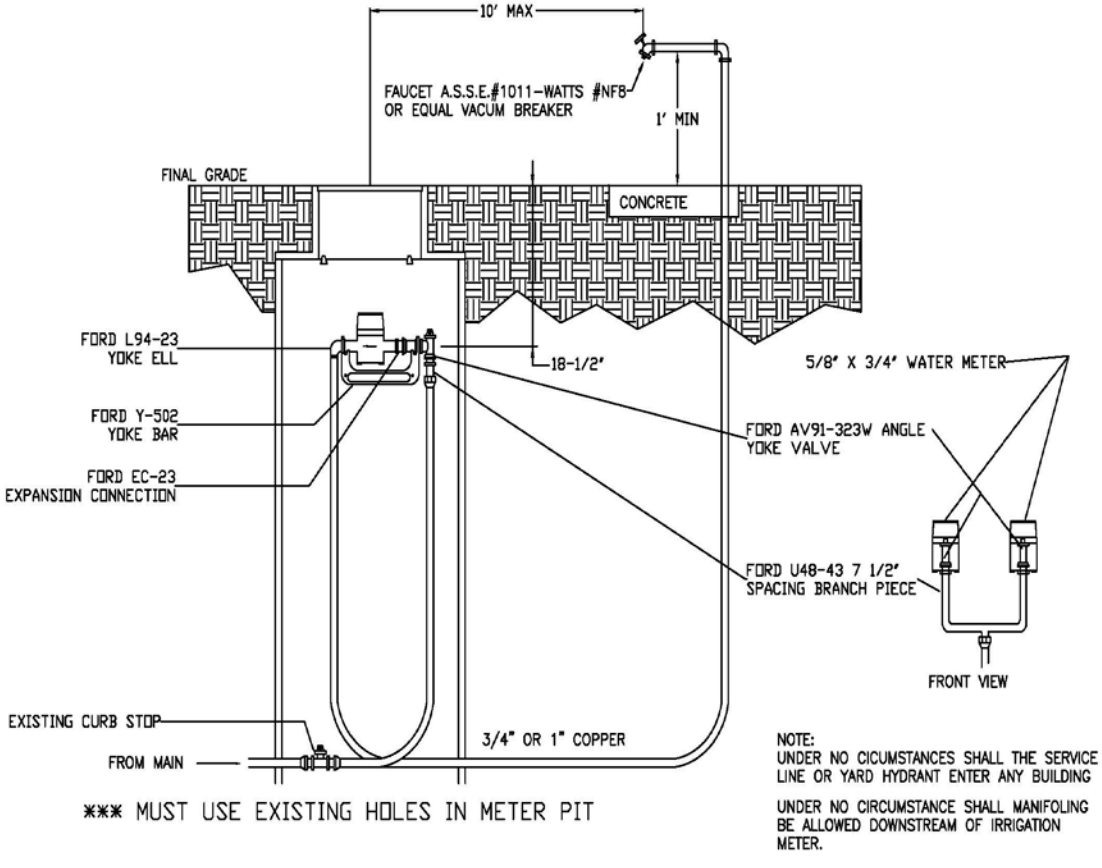

The Ford Meter Box Company with lock wings on the inlet valve. McDonald #14-2 (for 5/8" x 3/4"), and McDonald #14-3 (for 3/4" meters) are approved for use as meter yokes.

For 1 1/2" and 2" meters, the riser assembly shall be the equal of 1 1/2"--#VVF66-15BX13 custom setter and 2"--#VVF77-15BX17 Custom Setter, as manufactured by the Ford Meter Box Company or B-2423, as manufactured by Mueller Company. The installation of a public water supply connection for irrigation purposes only for an existing Greene County Sanitary Engineering Department public water supply customer involves two (2) major components which come under the jurisdiction of two (2) regulatory agencies (Greene County Sanitary Engineering and Greene County Health Department/Plumbing Inspection Division).

The first major component is the IRRIGATION WATER METER installation, under the Greene County Sanitary Engineering Department jurisdiction. This component involves:

1. Application to Greene County Sanitary Engineering Department for the permit and payment of tap-in fees and connection charges (Double yoke installation additional charge).
2. Excavation of meter pit top.
3. Installation of double meter yoke assembly (Typical Residential only).
4. Installation of irrigation meter.
5. Restoration of excavation.

All of this work must be performed by Greene County Sanitary Engineering Department or approved plumber. Water supply to the irrigation meter may be turned on and turned off only by Greene County Sanitary Engineering Department. Greene County Sanitary Engineering Department will perform a spring turn-off and fall turn-off at no charge the working day following notice by the customer.

The second major component is the SERVICE LINE AND YARD HYDRANT, under the jurisdiction of the Greene County Health Department/Plumbing Inspection Division. This component involves:

1. Application to Greene County Health Department/Plumbing Inspection Division for installation and payment of inspection fee.
2. Excavation from meter pit to yard hydrant.
3. Installation of service line (ductile "L" or "K" copper, D-2339, D-2241, D-2662 plastic).
4. Installation of yard hydrant (Murdock, Clayton, or equal) meeting Ohio E.P.A. cross-connection control standards.
5. Inspection of installation by Greene County Health Department/Plumbing Inspection Division.
6. Restoration of excavation.

This component of the work must be done by a plumber registered in Greene County or by the owner of the property. Cost of this component depends upon the materials used and length of service line.

# GREENE COUNTY SANITARY ENGINEERING DEPARTMENT
## STANDARD INSTALLATION FOR SINGLE 1 1/2”
## WATER SERVICE CONNECTION (FOR OFF-ROAD USE ONLY)

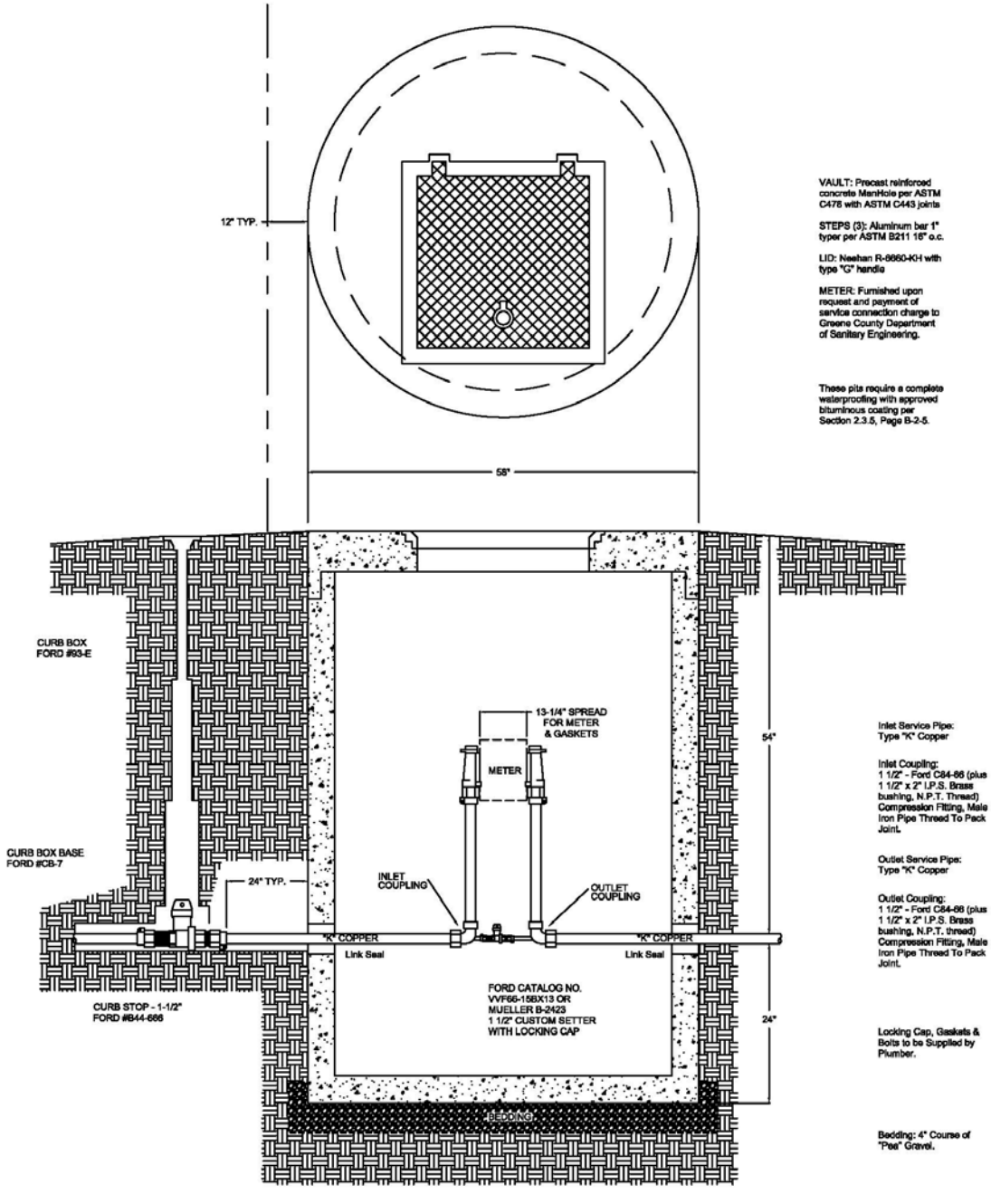

# GREENE COUNTY SANITARY ENGINEERING DEPARTMENT
## STANDARD INSTALLATION FOR SINGLE 2”
## WATER SERVICE CONNECTION (FOR OFF-ROAD USE <u>ONLY</u>)

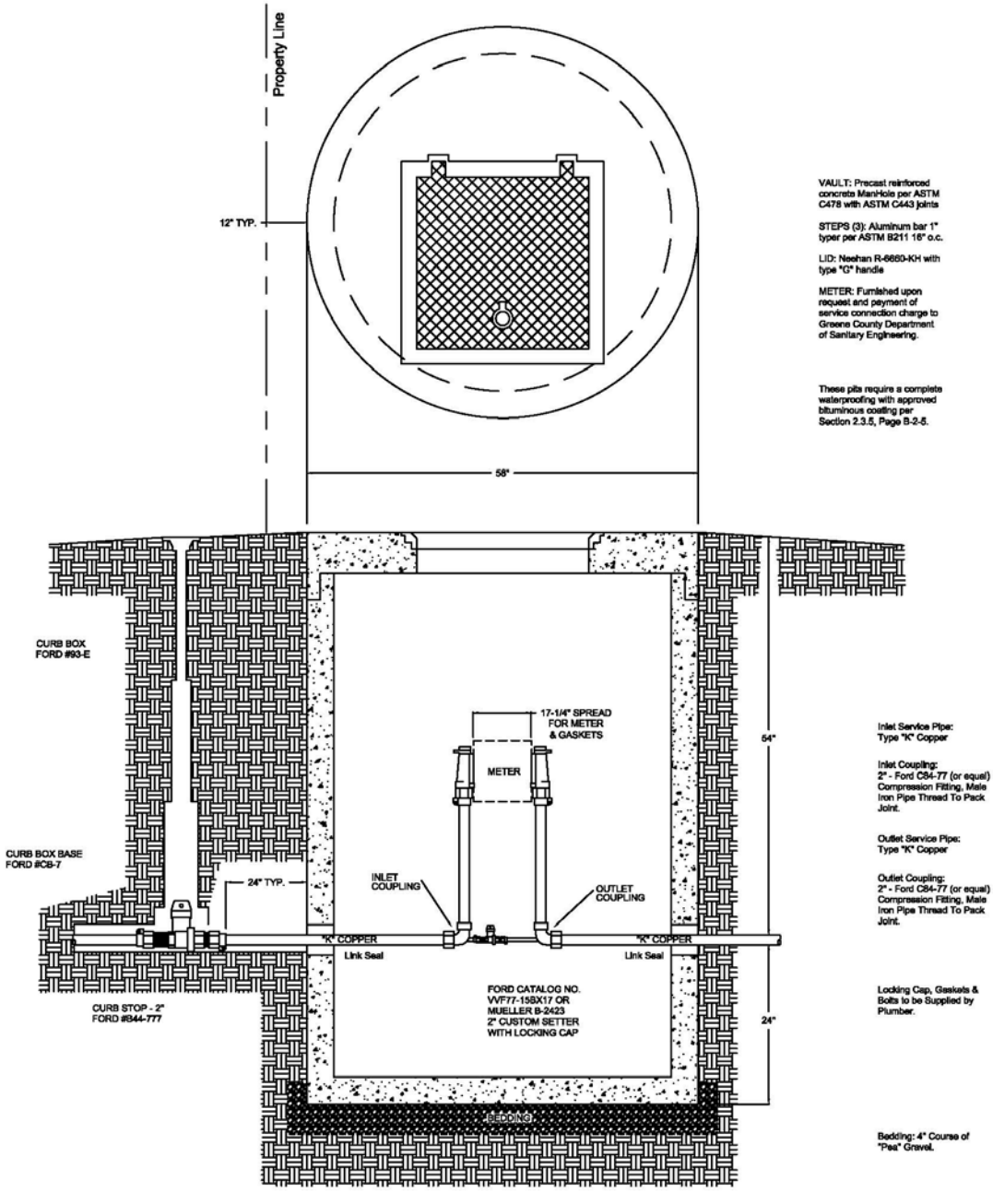

# GREENE COUNTY SANITARY ENGINEERING DEPARTMENT
## STANDARD INSTALLATION FOR SINGLE 3" OR LARGER WATER SERVICE CONNECTION (FOR OFF-ROAD USE ONLY)

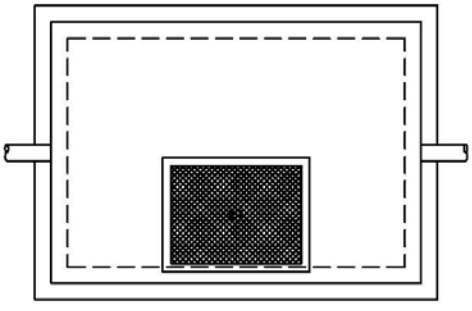

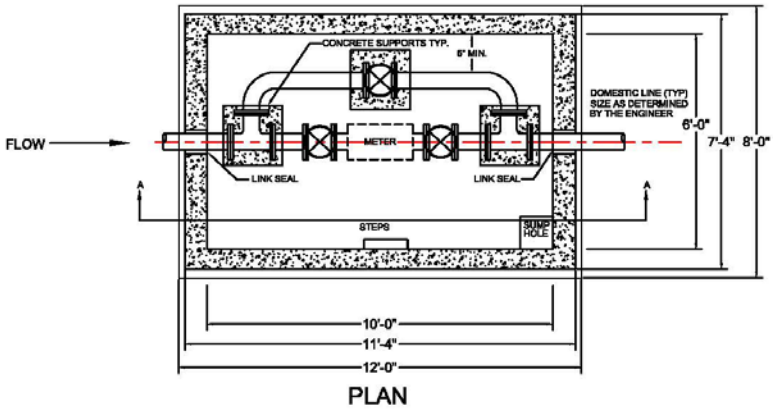


PLAN

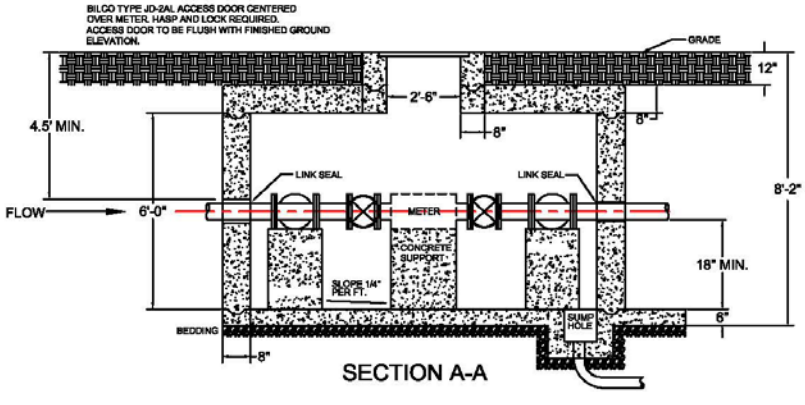


SECTION A-A

VAULT DIMENSION BY METER SIZE:
3" & 4" Meter - 6' x 6' x 8'
6" & 8" Meter - 6' x 6' x 10'
10" Meter - 6' x 6' x 12'

These pits require a complete waterproofing with approved bituminous coating per Section 2.3.5, Page B-2-5

VAILT WALLS: Formed concrete (4200 psi min. 28-day compressive strength)

VAULT FLOOR, TOP: Formed concrete (4200 psi min. 28-day compressive strength) with No. 5 steel reinforcing bars 6" o.c. along width and 12" o.c. along length.

STEPS (5): Aluminum bar type per ASTM B211, M.A. Industries step #PS-1, 16" o.c.

LID: Bilco JD-2AL

SERVICE PIPE: Class 52 D.I., flanged

VALVES (3): Resilient wedge flanged OS&Y gates with handwheels

FITTINGS: D.I., flanged type

METER: Furnished upon request and payment of service connection charge to Greene County Sanitary Engineering.

CONCRETE PAD: Poured concrete.

BEDDING: 4" course of 'pea' gravel.

SUMP HOLE: For Gravity Drain or Sump Pump.

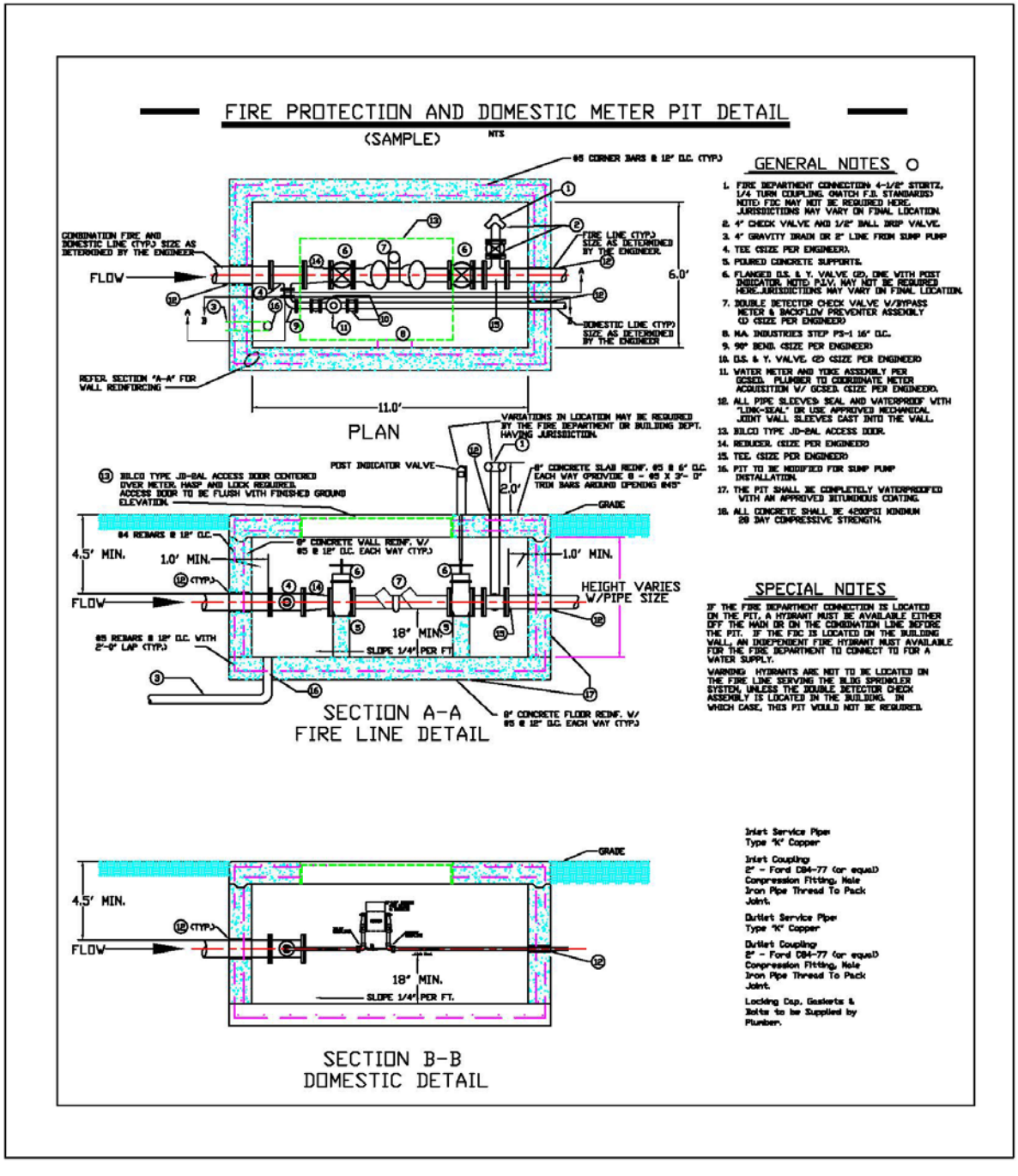
FIRE PROTECTION AND DOMESTIC METER PIT DETAIL
(SAMPLE)
NTS
#5 CORNER BARS @ 12" O.C. (TYP.)
COMBINATION FIRE AND DOMESTIC LINE (TYP.) SIZE AS DETERMINED BY THE ENGINEER
FLOW
FIRE LINE (TYP.) SIZE AS DETERMINED BY THE ENGINEER.
6.0'
DOMESTIC LINE (TYP) SIZE AS DETERMINED BY THE ENGINEER
REFER SECTION "A-A" FOR WALL REINFORCING
11.0'
PLAN
VARIATIONS IN LOCATION MAY BE REQUIRED BY THE FIRE DEPARTMENT OR BUILDING DEPT. HAVING JURISDICTION.
POST INDICATOR VALVE
8" CONCRETE SLAB REINF. #5 @ 6" O.C. EACH WAY (PROVIDE 6 - #5 X 3'- 0" TRIM BARS AROUND OPENING #45°
2.0'
BILCO TYPE JD-8AL ACCESS DOOR CENTERED OVER METER. HASP AND LOCK REQUIRED. ACCESS DOOR TO BE FLUSH WITH FINISHED GROUND ELEVATION.
GRADE
#4 REBARS @ 12" O.C.
8" CONCRETE WALL REINF. W/ #5 @ 12" O.C. EACH WAY (TYP.)
4.5' MIN.
1.0' MIN.
1.0' MIN.
HEIGHT VARIES W/PIPE SIZE
FLOW
18" MIN.
SLOPE 1/4" PER FT
#5 REBARS @ 12" O.C. WITH 2'-0" LAP (TYP.)
SECTION A-A
FIRE LINE DETAIL
8" CONCRETE FLOOR REINF. W/ #5 @ 12" O.C. EACH WAY (TYP.)
GENERAL NOTES
1. FIRE DEPARTMENT CONNECTION: 4-1/2" STORTZ, 1/4 TURN COUPLING. (MATCH F.D. STANDARDS) NOTE: FDC MAY NOT BE REQUIRED HERE. JURISDICTIONS MAY VARY ON FINAL LOCATION.
2. 4" CHECK VALVE AND 1/2" BALL DRIP VALVE.
3. 4" GRAVITY DRAIN OR 2" LINE FROM SUMP PUMP
4. TEE (SIZE PER ENGINEER).
5. POURED CONCRETE SUPPORTS.
6. FLANGED O.S. & Y. VALVE (2), ONE WITH POST INDICATOR. NOTE: P.I.V. MAY NOT BE REQUIRED HERE. JURISDICTIONS MAY VARY ON FINAL LOCATION.
7. DOUBLE DETECTOR CHECK VALVE W/BYPASS METER & BACKFLOW PREVENTER ASSEMBLY (2) (SIZE PER ENGINEER)
8. W.A. INDUSTRIES STEP PS-1 16" O.C.
9. 90° BEND. (SIZE PER ENGINEER)
10. O.S. & Y. VALVE. (2) (SIZE PER ENGINEER)
11. WATER METER AND YOKE ASSEMBLY PER GCSED. PLUMBER TO COORDINATE METER ACQUISITION W/ GCSED. (SIZE PER ENGINEER).
12. ALL PIPE SLEEVES SEAL AND WATERPROOF WITH "LINK-SEAL" OR USE APPROVED MECHANICAL JOINT WALL SLEEVES CAST INTO THE WALL.
13. BILCO TYPE JD-8AL ACCESS DOOR.
14. REDUCER. (SIZE PER ENGINEER)
15. TEE. (SIZE PER ENGINEER)
16. PIT TO BE MODIFIED FOR SUMP PUMP INSTALLATION.
17. THE PIT SHALL BE COMPLETELY WATERPROOFED WITH AN APPROVED BITUMINOUS COATING.
18. ALL CONCRETE SHALL BE 4200PSI MINIMUM 28 DAY COMPRESSIVE STRENGTH.
SPECIAL NOTES
IF THE FIRE DEPARTMENT CONNECTION IS LOCATED ON THE PIT, A HYDRANT MUST BE AVAILABLE EITHER OFF THE MAIN OR ON THE COMBINATION LINE BEFORE THE PIT. IF THE FDC IS LOCATED ON THE BUILDING WALL, AN INDEPENDENT FIRE HYDRANT MUST AVAILABLE FOR THE FIRE DEPARTMENT TO CONNECT TO FOR A WATER SUPPLY.
WARNING: HYDRANTS ARE NOT TO BE LOCATED ON THE FIRE LINE SERVING THE BLDG SPRINKLER SYSTEM, UNLESS THE DOUBLE DETECTOR CHECK ASSEMBLY IS LOCATED IN THE BUILDING. IN WHICH CASE, THIS PIT WOULD NOT BE REQUIRED.
GRADE
4.5' MIN.
FLOW
18" MIN.
SLOPE 1/4" PER FT.
SECTION B-B
DOMESTIC DETAIL
Inlet Service Pipe
Type "K" Copper
Inlet Coupling
2" - Ford C84-77 (or equal)
Compression Fitting, Male Iron Pipe Thread To Pack Joint.
Outlet Service Pipe
Type "K" Copper
Outlet Coupling
2" - Ford C84-77 (or equal)
Compression Fitting, Male Iron Pipe Thread To Pack Joint.
Locking Cap, Gaskets & Bolts to be Supplied by Plumber.

For further details on the irrigation water meter component, contact Greene County Sanitary Engineering Department at 376-7461 or 376-7462. For further details on the service line and yard hydrant component, contact Greene County Health Department/Plumbing Inspection Division at 376-7416.

## 2.4*VALVES AND GATES

### 2.4.1*GENERAL

Valves and gates of the sizes and types specified or shown on the construction drawings shall be provided for the proper completion of the work included under the project.

Operating nuts, hand wheels, gaskets, bolts and nuts and all necessary appurtenances for a complete installation of the valves and gates shall be furnished with the valves.

All valves, not installed in the ground, shall be cleaned after installation and painted as specified under the Item, "Painting."

Complete details of all valves to be used on the project shall be submitted to the County for approval, prior to shipment.

### 2.4.2*TYPE OF VALVE

The construction drawings may state which type of valve is to be used. If the type is not stated and only the size is given, either the gate type or plug type may be used if both types are included in these specifications. Butterfly valves, if required, will be indicated on the proposal sheets or construction drawings.

### 2.4.3*VALVE BOXES

A valve box shall be provided for every operating nut of a buried gate, plug or butterfly valve with operating mechanism fully protected with a cast iron grease case.

The valve box shall not transmit shock or stress to the valve. It shall be centered and plumb over the wrench nut of the valve. The box cover shall be flush with the finished pavement or at such other level as may be directed by the County.

The assembly shall consist of three (3) pieces and a cover. The cover shall be marked, "Water" where the pressure main is installed for water service. The valve box shall be screw type, cast iron with 5 1/4" shaft. A round base which will enclose the valve bonnet shall be furnished with six-inch (6") and eight-inch (8") valves. An oval base shall be supplied with valves larger than eight inches (8").



A masonry valve pit shall be provided for every valve, which has exposed gearing or operating mechanisms, if that type valve is specified. The details of such an enclosure are shown on the construction drawings.

### 2.4.4*GATE VALVES

Gate valves for buried pipelines shall be iron body, bronze mounted, resilient wedge gate valves with non-rising stems having either parallel or inclined seats in accordance with AWWA C509, "Resilient Seated Gate Valves, 3 through 12 NPS for Water and Sewage Systems." Gate valves to be used for water mains twelve inches and smaller in diameter.

The ends of the valve shall be bell, mechanical joint, flange, or bell machined to the bell diameter of AWWA C301 pre-stressed concrete pipe. Mechanical joint bell ends will be used in buried pipelines of mechanical joint and rubber seal type joint cast iron. Bell and flange ends will be used in exposed cast iron piping at the locations shown on the construction drawings. Special diameter bell ends will be used for gate valves in pre-stressed concrete water mains.

**2.4.5*OPERATING NUTS**

Gate valves for buried pipelines shall be furnished with two-inch (2") square wrench nuts. Nuts shall have a flanged base upon which shall be cast an arrow two-inches (2") long showing the direction of opening, and the word, "OPEN" in one-half inch (1/2") or larger letters, shall be cast on the nut to clearly indicate the direction the wrench is to be turned to open the valve.

**2.4.6*HANDWHEELS**

Hand wheels may be specified for operating valves in exposed piping on the construction drawings. The hand wheels shall have an arrow and the word "OPEN," cast thereon; to clearly indicate the direction the hand wheel is to be turned to open the valve. The diameter of the hand wheel shall conform to the following dimensions for the various size gate valves:

| Size of Valve | Diameter of Hand wheel |
|---|---|
| 4" | 10" |
| 6" | 12" |
| 8" | 14" |
| 10" and 12" | 18" |
| 16" and 18" | 22" |
| 18" and 20" | 24" |
| 24" and 30" | 30" |

**2.4.7*HORZONTAL MOUNTING**

Gate valves in size sixteen inches (16") and larger may be installed in the horizontal position, if specified on the proposal sheets and shown on the construction drawings. Bronze tracks, rollers, and scrapers will be provided for valves to be installed in the horizontal position. Horizontal valves for pressure lines shall be furnished with beveled gear operators. The gear cases for buried service shall be totally enclosed, and the gear cases for exposed piping in a vault shall be of the extended type.

**2.4.8*BYPASS VALVES**

Bypasses shall be furnished on valves when so specified on the proposal sheets or shown on the construction drawings. The bypass valve shall be furnished of the same type as the main line valve to which it is fitted. The size requirements of the bypass shall be as follows:

| Valve Diameter-Inches | Bypass Diameter-Inches |
|---|---|
| 16-20 | 3 |
| 24-30 | 4 |
| 36-42 | 6 |
| 48 | 9 |

**2.4.9*RISING STEM VALVES**

Outside screw and joke rising stem valves shall conform to all of the requirements of AWWA C500 except for the rising stem mechanism. The OS & Y valves shall be furnished with hand wheels.

**2.4.10*LOW AND MEDIUM PRESSURE VALVES**

Low pressure and medium pressure valves, if specified on the construction drawings, shall be the same design, workmanship, and materials as AWWA C509 valves except that they can be lighter in weight. Medium pressure and low pressure valves shall be tested for performance in operation, water tightness, and resistance to distortion under internal pressure in the manner described in AWWA C509, except that the minimum rated pressure and hydrostatic pressure shall be as follows:

**Medium Pressure Valves**

| Valve Size-Inches | Rated Pressure (psi) | Hydrostatic Test Pressure (psi) |
|---|---|---|
| 4 through 24 | 100 | 200 |
| 30 through 36 | 80 | 150 |
| 42 through 54 | 60 | 120 |

**Low Pressure Valves**

| Valve Size-Inches | Rated Pressure (psi) | Hydrostatic Test Pressure (psi) |
|---|---|---|
| 16 through 24 | 50 | 75 |
| 30 through 36 | 43 | 75 |
| 42 through 48 | 35 | 50 |

Gate valves for fire protection systems shall be manufactured in conformance with the requirements of the Underwriter's Laboratories, Inc., and the Associated Factory Mutual Laboratories. Gate valves, which support an indicator post, shall contain a flange cast integrally with the valve bonnet, which will match the flange of the indicator post base. Such valves are specified on the proposal sheets and construction drawings and shall bear the inspection label of the Underwriter's Laboratories, Inc.

**2.4.12*SPECIAL DETAILS**

The details of other valve requirements and valve appurtenances, such as special ends and materials, position indicators, floor stands, cylinders, chain operators, and extension stems and guides are described on the construction drawings.

**2.4.13*DIRECTION OF OPENING**

The valves shall open by turning the operator to the right, that is, in a clockwise direction, unless otherwise stated.

**2.4.14*BUTTERFLY VALVES**

Cast iron and steel, rubber seat, tight-closure butterfly valves shall conform to the requirements of AWWA C504, "Rubber-Sealed Butterfly Valves." The valve disc shall seat at an angle of between eighty-one degrees (81°) and ninety degrees (90°) to the pipe axis. The valve seats shall be designed to provide tight shut-off at the specified pressure differential. Butterfly valves are to be used for water mains larger than twelve inches in diameter.

The class of the butterfly valve will be stated on the proposal sheets and the County will require records of performance, leakage, and hydrostatic tests, as outlined in AWWA C504. The manufacturer shall also supply certified drawings of the equipment to the County for approval prior to installation.

Butterfly valves for buried pipelines are located in concrete vaults or directly buried. The construction drawings and/or proposal sheets specify the type installation. The butterfly valves for buried pipelines shall be installed in the horizontal position. Direct burial valves shall be supplied with totally enclosed gear case and bonnet of corrosion-resistant metals and manual operators equipped with an AURA Square nut. Butterfly valves for direct burial shall be supplied with mechanical joint bell ends, push-on joint bell ends, or spigot ends with shoulders for victaulic couplings. Butterfly valves to be installed in vaults may be supplied with an open bonnet.

Specific types of operators and accessories for other types of installations are specified on the construction drawings.

Manufacturers of butterfly valves shall furnish the County with experience records of their valves previously installed.

## 2.4.15*TAPPING SLEEVES AND TAPPING MACHINE VALVES

Tapping sleeves and tapping machine valves of the size specified shall be installed by the Contractor at the locations shown on the construction drawings or set by the County when it is necessary to cut into an existing water main under pressure. The tapping sleeve must be of the mechanical joint type. It shall be installed in such a manner as to provide a watertight joint with both sections of the sleeve and the existing water main. The sleeve shall be installed so that the axis of the center of the valve opening is level.

The Contractor shall use a suitable large drilling machine to make the cut into the existing water main under pressure. The section of pipe shall be removed and delivered to the County.

The sleeve and valve shall meet all of the requirements of these specifications for cast iron or ductile iron pressure pipe and for gate valves.

## 2.4.16*CHECK VALVES

Check valves shall be cast iron body, horizontal swing type, fully bronze mounted with a bronze gate and seat rings machined to a watertight surface. The gate shall hang from a stainless steel shaft with a heavy solid bronze hinge. The gate shall be assembled in such a manner as to prevent gate rotation, distribute the seat wear and assure alignment of the gate with the body seat. The check valve body design shall obtain full nominal pipe diameter with the valve clapper clear of the waterway in the open position.

Check valves shall be supplied with removal covers or hand hole plates for inspection and maintenance without removing the valve body from the line.

Underwriter's Laboratory check valves, if specified on the construction drawings and/or proposal sheets, shall be provided with two (2) bosses on each side and two (2) bosses on the bottom and the inspection seal of the Underwriter's Laboratory. Special taps in the bosses, if required, will be specified on the construction drawings.
Regulations and Specifications Greene County, Ohio Part B--Construction Materials

The type outside lever and spring and outside lever and weight accessories for check valves will be specified on the construction drawings, if such accessories are required.

Normally, the check valves shall be supplied with flanged ends. If special ends are required, those ends shall meet the similar specific requirements stated for gate valves.

All check valves shall be tested hydrostatically by the manufacture to 300 psi. and finish in the same manner as AWWA C500 gate valves.

The design features of the check valve to be used on the project must be submitted to the County for approval prior to installation.

## 2.4.17*AIR RELEASE VALVES-WATER

Air release valves for water shall have cast iron bodies and bronze trim and shall be designed for a working pressure, 150 psi. Each valve shall be of a type wherein a spherical float resting on the surface of the water within the valve casing opens or closes the air discharge vent hole by means of a lever movement.

The spherical float shall be constructed of stainless steel of sufficient strength to withstand the pressures to which it will be subjected, and will be connected by means of a lever movement to the valve stem, thereby providing opening and closing of the discharge port, subject to the position of the float resting on the liquid within the valve chamber.

The construction of the valve shall be such that there is excess power in the float to insure opening of the valve port under high internal pressure, and the design of the unit shall be such that it will not stick, shut or leak water under continued long operating conditions.

The air release valve shall be as manufactured by APCO or the Valve and Primer Corporation, Chicago, Illinois. The style and size shall be as shown on the construction drawings and described on the proposal sheets. Typical model shall be APCO Model 200-A unless shown otherwise on detailed drawings. See details on Page B-2-20 of this section.

**2.4.18*AIR AND VACUUM VALVE**

Air and vacuum valves shall be constructed with a stainless steel float, cast iron body with bronze trim. The valve shall include a throttling device on the air discharge vent.
The air and vacuum valves shall be as manufactured by the Valve and Primer Corporation, Chicago, Illinois. The style and size shall be as shown on the construction drawings and described on the proposal sheets.

# GREENE COUNTY OFFICE OF SANITARY ENGINEERING
# AIR RELEASE MANHOLE FRAME AND COVER

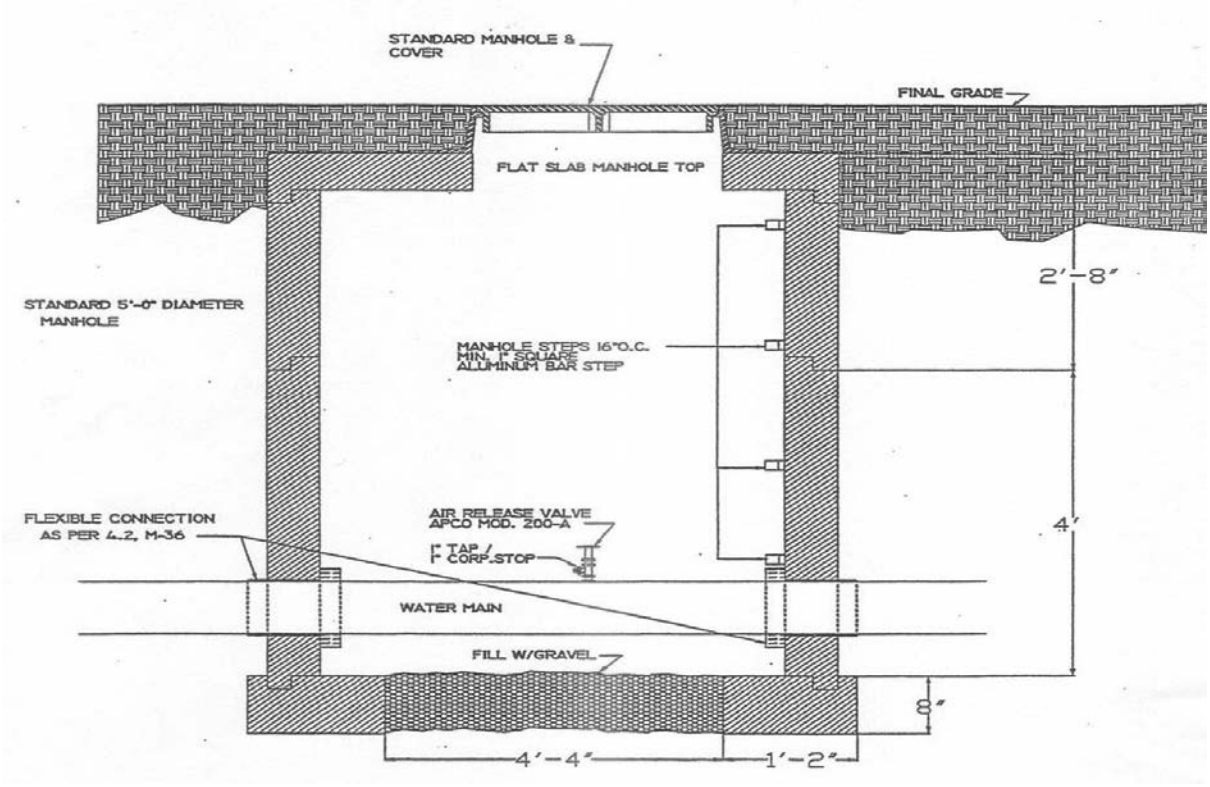

## 2.5*FIRE HYDRANTS

### 2.5.1* GENERAL

Fire hydrants shall conform to the applicable requirements of AWWA C502, "Fire Hydrants for Ordinary Water Works Service." The hydrants shall have a main valve opening, size as designated herein, one (1) pumper connection and two (2) hose connections. All connections shall be furnished with unchained caps. The type of thread and sizes of openings shall be as listed in Table No. 1, "Fire Hydrant Details." All bearing points on the hydrant shall be bronze mounted. The size and shape of the caps and operating nuts together with the direction of opening are listed in Table No. 1 on Page 23 of this section.

The hydrants shall be supplied with six-inch (6") mechanical joint hub inlet normally for five feet (5') burial of the water main. Barrel extension sections complete with stem extensions shall be furnished for fire hydrants which are set with more than four feet six inches (4' 6") of cover.

The hydrants shall incorporate a breakable component at the standpipe flange and a breakaway stem coupling so designed that when the hydrant is subjected to severe impact, the special component will shear off at the flange without damage to the hydrant barrel. The main valve shall remain closed if the barrel section and upper stem is separated from the remainder of the hydrant.

The fire hydrants shall be furnished with drain valves which will open when the main valve is closed and shall drain the standpipe completely. The drain valves shall close when the hydrant main valve is opened in such a manner that there will be no leakage through the waste outlets.

The manufacturer shall furnish the County with two (2) copies of a certification that the required tests on the various materials and on the completed hydrant have been made and that the results conform to the requirements of AWWA Specification C502.

The design information on the fire hydrant shall be furnished to the County for approval prior to shipment of material to the project.

**TABLE NO.1**
**FIRE HYDRANT DETAILS**

| | |
|---|---|
| 1. Dia. - Main Valve Opening | 5 ¼ Inches with bronze-to-bronze seats |
| 2. Dia. - Pumper Connection | 4 1/2 Inches |
| 3. Dia. - Hose Connections | Two 2 1/2 Inches |
| 4. Thread Type | National Standard |
| 5. Shape - Caps & Operating Nut | Pentagon with weather shield and one piece bronze operating nut |
| 6. Dimensions - Operating Nut<br>Top<br>Bottom | <br>1 1/2 Inches<br>1 1/2 Inches |
| 7. Direction of Opening | Right (Clockwise) |
| 8. Color to be Painted | Glidden "Voltage Yellow" 6940 or approved equal |
| 9. Specific Model or Models Required | Mueller, Centurion A423; **Eddy Model F2640**; Clow Medallion; WB67 Waterous |

# SECTION 3

## 3*GRAVITY PIPE

### 3.1*VITRIFIED CLAY PIPE

#### 3.1.1*GENERAL
Vitrified clay pipe and fittings shall be extra strength and shall conform to the requirements of ASTM C700, except for the revisions to Table 1 and Table 2 described in these specifications. The vitrified pipe may be glazed or unglazed.

#### 3.1.2*STRENGTH
The crushing strengths shall be increased to the following values:

**Minimum Strength in Pounds per Lineal Foot**

| Nominal Size Inches | Three Edge Bearing Method | Sand Bearing Method | |
|---|---|---|---|
| 4 | 2400 | 3600 | 6 |
| 2400 | 3600 | | |
| 8 | 2400 | 3600 | |
| 10 | 2400 | 3600 | |

#### 3.1.3*JOINTS
The joints for vitrified clay pipe shall conform to the requirements of ASTM Specification C425, “Compression Joints for Vitrified Clay Bell & Spigot Pipe.” The compression ring of elastomeric material shall be approved by the Sanitary Engineer. Lubricants of the type recommended by the manufacturer of the pipe joint shall be supplied in quantities sufficient to assemble all of the vitrified clay pipe joints.

#### 3.1.4*SERIVCE CONNECTIONS
Service connections to a vitrified clay sewer shall be made through vitrified “Wye” branches for eight-inch (8”) diameter sewer and “Tees” for ten-inch (10”) and larger diameter sewer.

Each branch or tee shall be furnished with a vitrified clay stopper which shall be sealed and banded into the branch opening until the service line is installed. The stopper joint will be suitable to withstand an internal pressure of five (5) psi without leaking.

### 3.2*NON-REINFORCED CONCRETE

#### 3.2.1*GENERAL
Non-reinforced concrete pipe and fittings conform to ASTM Specification C14, “Concrete Sewer, Storm Drain and Culvert Pipe,” except for the revisions to Table 2, described in these specifications.

**3.2.2*STENGTH**
The crushing strengths of the non-reinforced concrete pipe described in Table 2 of ASTM C14 shall be increased to the following values:

**Minimum Strength in Pounds per Lineal Foot**

| Internal Diameter Inches | Three Edge Bearing Method |
|---|---|
| 8 | 2400 |
| 10 | 2400 |
| 12 | 2600 |
| 15 | 2900 |
| 18 | 3300 |
| 24 | 4400 |

**3.2.3*JOINTS**
The joints for non-reinforced concrete pipe shall conform to ASTM C443, "Joints for Circular Concrete and Culvert Pipe, Using Flexible, Watertight, Rubber Gaskets." The rubber gaskets shall be circular in cross section. Lubricants and/or adhesives shall be used as recommended by the manufacturer of the pipe and shall be supplied in quantities sufficient to assemble all of the concrete sewer pipe joints.

**3.2.4*SERVICE CONNECTIONS**
Service connections to a non-reinforced concrete sewer shall be made through a Wye or Tee vitrified clay pipe saddle cast into the concrete sewer pipe at the point of manufacture.

Each Wye or Tee shall be furnished with a vitrified clay stopper which shall be sealed and banded into the branch opening until the service line is installed. The stopper joint will be suitable to withstand an internal pressure of five (5) psi without leaking. All connections made to existing sanitary sewers shall be made with a Geneco, or approved equal, "Sealtite" Sewer Pipe Saddle.

**3.3*REINFORCED CONCRETE PIPE**

**3.3.1* GENERAL**
Reinforced concrete pipe shall conform in all respects to the requirements of ASTM C76, "Reinforced Concrete Culvert, Storm Drain, and Sewer Pipe." Wall "B" and Wall "C" thickness designs shall be supplied.

Table V of ASTM C76 shall be modified as specified in OHIO CM 706.02.

Class for the reinforced concrete pipe shall be as shown on the construction drawings.

**3.3.2*JOINTS**
The joints for reinforced concrete pipe shall conform to ASTM C443, "Joints for Circular Concrete and Culvert Pipe, Using Flexible, Watertight, Rubber Gaskets." The rubber gaskets shall be circular in cross section. Lubricants and/or adhesives required for assembling the completed joint shall be supplied in sufficient quantities for the project.

**3.3.3*SERVICE CONNECTIONS**
Service connections to a reinforced concrete sewer shall be made through a Wye or Tee vitrified clay pipe saddle cast into the concrete sewer pipe.

Each Wye or Tee shall be furnished with a vitrified clay stopper which shall be sealed and banded into the branch opening until the service line is installed. The stopper joint will be suitable to withstand an internal pressure of five (5) psi without leaking. All connections made to existing sanitary sewers shall be made with a Geneco, "Sealtite" Sewer Pipe Saddle, Inserta Fitting Co. "Inserta Tee" Sewer Pipe Saddle, or approved equal.

## 3.4*PVC PIPE

### 3.4.1*PVC D3034 SDR 35

Is approved for use for sanitary sewerage main works in residential subdivisions not subject to industrial wastewater flows.

A.PVC PIPE

PVC sewer pipe and fittings shall meet and/or exceed all the requirements of ASTM D-3034, SDR 35 and have a minimum pipe stiffness of forty-six pounds (46 lbs.) per square inch. All main line PVC sewer pipe shall be eight-inches (8") minimum to fifteen inches (15") maximum diameter. All pipe spigots shall have a "home" mark to facilitate joint closure. Maximum depth of cover shall be fifteen feet (15').

B. FITTINGS

PVC fittings shall be factory made and provided with joints of proper design to connect to the pipe or approved adapters shall be furnished to connect the pipe to the fittings. Adapters shall be provided for connection to pipes of different materials. All joints and fittings shall be formed to provide as nearly as practical a leak-free and easily assembled system.

C. CERTIFICATE

A manufacturer's certificate that the PVC material and pipe was manufactured and tested in accordance with the appropriate ASTM Specification shall be furnished to the Engineer prior to installation of the pipe.

D. MANUFACTURER

The manufacturer of the PVC sewer pipe furnished shall provide installation instruction and literature to the Contractor so that he will be aware of the manufacturer's recommended procedure and practice of installing pipe and fittings. The cost of this instruction shall be included in the price bid for the pipe and the fittings. These instructions shall conform to ASTM D-2321 (Standard Practice for Underground Installation of Thermo plastic pipe for sewers and other gravity-flow applications).

E. INSPECTION

All pipe and fittings will be inspected by the Engineer or his authorized representative immediately prior to installation and all rejected pieces must be completely removed from the project. Pipe acceptable to the Engineer must be substituted for rejected pieces at the Contractor's expense. No repairs of pipe or fittings will be allowed; undamaged lengths of straight pipe may be salvaged by neatly sawing off the damaged portion of the pipe.

F. EXPOSURE TO SUNLIGHT

Care shall be taken to protect PVC sewer pipe from prolonged exposure to heat or direct sunlight (ultraviolet rays).

G. TEMPERATURE

No installation of PVC sewer pipe shall be made when the air temperature is below twenty degrees Fahrenheit (20°F).

### 3.4.2*PIPE JOINTS

PVC sewer pipe joints shall be elastomerically gasketed and shall conform to ASTM D3212. The joint shall be so designed to avoid displacement of the gasket when installed in accordance with the manufacturer's recommendation. All gaskets shall be molded into a circular form and shall consist of a properly vulcanized high-grade elastomeric compound. The gasket shall be the only element depended upon to make the joint flexible and watertight. Solvent cemented joints may also be permitted provided the procedures and installation conform to ASTM D-2855.

### 3.4.3*FITTINGS

All fittings and accessories shall be as manufactured and furnished by the pipe supplier or approved equal and have bell and/or spigot configurations compatible with that of the pipe.

## 3.5*ABS/PVC

### 3.5.1*ABS/PVC COMPOSITE SANITARY SEWER PIPE (D-2680)

Is approved for use for sanitary sewerage main works in residential subdivisions not subject to industrial wastewater flows.
A. All acrylonitrile-butadiene-styrene (ABS) or polyvinyl chloride (PVC) composite sanitary sewer pipe under these specifications shall meet and/or exceed ASTM D-2680. All main line ABS or PVC sewer pipe shall be eight inches (8") minimum to fifteen inches (15") maximum diameter. The maximum depth of cover for ABS or PVC composite pipe shall be twenty-two feet (22').

Solid wall pipe and fittings, six-inch (6") diameter and smaller, shall meet and/or exceed all the requirements of ASTM D-2751 (ABS), SDR 35 or ASTM D-3034 (PVC), SDR 35.

A manufacturer's certificate that the composite pipe material and pipe was manufactured and tested in accordance with the appropriate ASTM specifications shall be furnished to the Project Engineer prior to installation of the pipe.

B. FITTINGS
Composite pipe fittings shall be factory made of the in line or saddle type and provided with joints of proper design to connect to the pipe, or approved adapters shall be furnished to connect the pipe to the fittings. Adapters shall be provided for connection to pipes of different materials. All joints and fittings shall be formed to provide as nearly as practical a leak-free and easily assembled system.

C. PROTECTION
Care shall be taken to protect composite sewer pipe from prolonged exposure to heat or direct sunlight (ultraviolet rays). No installation of ABS or PVC sewer pipe shall be made when the air temperature is below twenty degrees Fahrenheit (20° F). Installation shall conform to ASTM D-2321 (Standard Practice for Underground Installation of Thermo plastic pipe for sewers and other gravity-flow applications).

D. JOINTS
All pipe spigots shall have a "home" mark to facilitate joint closure. Gasketed joints conforming to Section 3.4.2 shall be used for ABS/PVC composite pipe.

E. DIMENSIONS
The pipe shall have a maximum deviation from straightness of one-sixteenth inch (1/16") per lineal foot when measured in accordance with ASTM D-2680. The pipe shall conform to the dimensions and tolerances shown in ASTM D-2680.

F. SERVICES CONNECTIONS
Service connections to an ABS or PVC composite pipe shall be made through an ABS or PVC wye branch. Each wye shall be furnished with a chemical-welded end cap, mechanically expanded pipe stopper or a polyurethane stopper. The stopper joint will be suitable to withstand an internal pressure of five (5) psi without leaking. PVC SDR 23.5 may be used for four-inch (4") or six-inch (6") service laterals up to a maximum depth of cover of twenty-two feet (22').

3.5A-DUCTILE IRON PIPE AS GRAVITY SANITARY SEWER PIPE

3.5A.1-GLASS-LINED DUCTILE IRON PIPE, POLYETHYLENE-LINED (INSIDE LINING), OR U.S. PIPE PROTECTO CERAMIC EPOXY LINING: shall be allowed for gravity sanitary sewer pipe. Material and procedural specifications shall comply with Office of Sanitary Engineering pressure pipe specifications for ductile iron pipe. Testing Gravity Pipe

**3.6.1*GENERAL**

The pipe and fittings will be tested by a competent independent testing company and/or other designated representatives of the County at the factory of the pipe manufacturer. The Contractor shall be required to insure that the manufacturer of the pipe will make available the required samples of the material. A minimum of 0.5 percent (0.5%) of the number of pipe to be supplied in each size, but in no case less than two (2) specimens, shall be selected by the testing company for the crushing test. One (1) specimen of each pipe broken in the strength test shall be tested for absorption.

The testing reports will be submitted to the County. After the reports have been approved by the County, the testing company shall mark or stamp each batch or run of pipe from which the approved test samples were taken.

No pipe shall be delivered to the project site until it has been marked or stamped by the testing company.

The costs for the initial testing shall be paid by the County but the Contractor shall pay all costs for retesting, if the initial tests and inspections indicate that such retesting is justified.

# GREENE COUNTY OFFICE OF SANITARY ENGINEERING
# CAST IRON MANHOLE FRAME

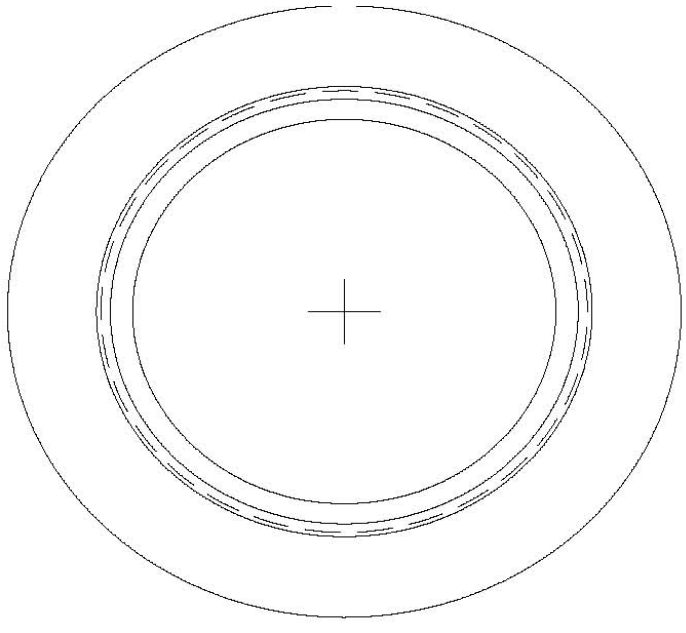

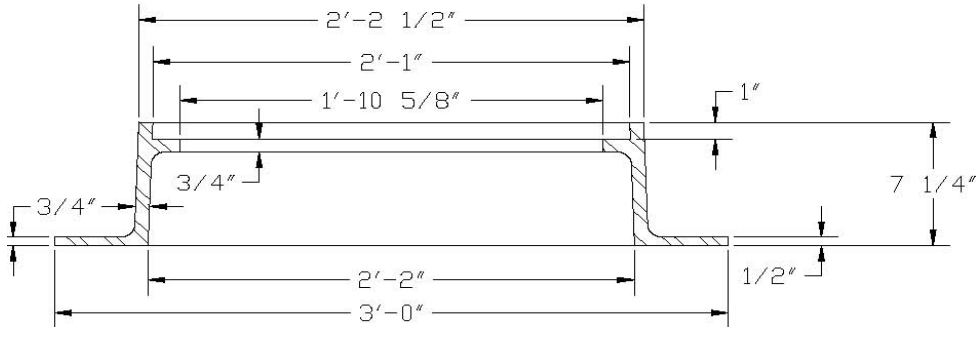

# GREENE COUNTY OFFICE OF SANITARY ENGINEERING
# CAST IRON MANHOLE COVER

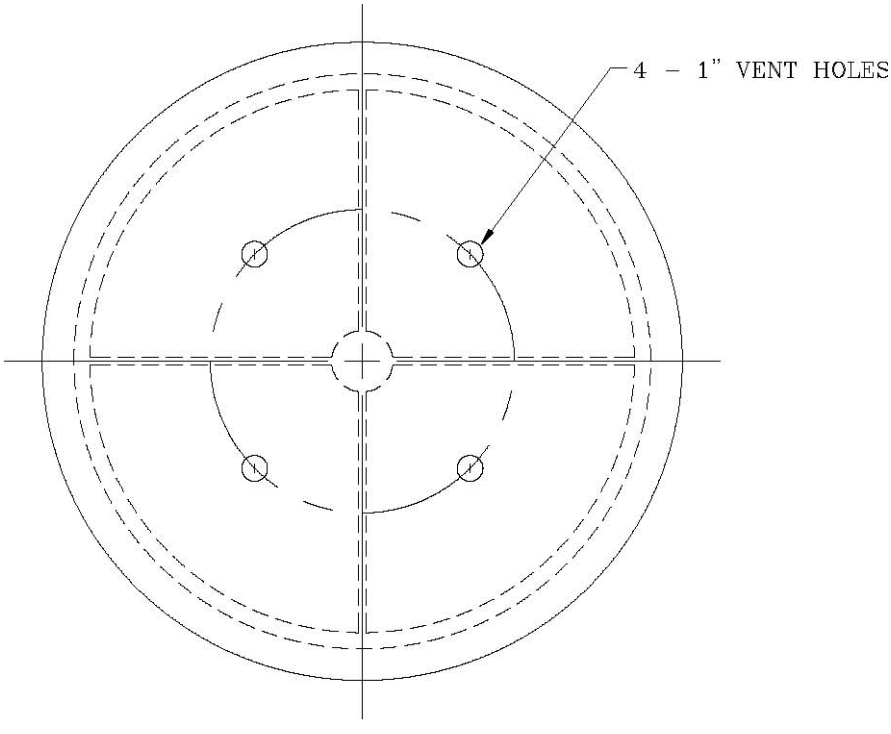


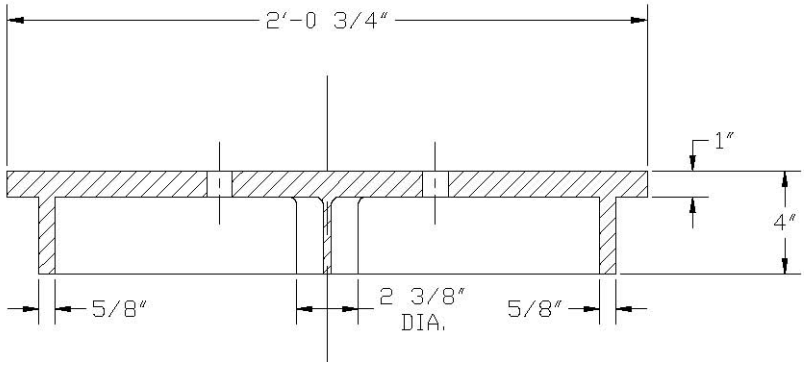

# GREENE COUNTY OFFICE OF SANITARY ENGINEERING
# WATERTIGHT MANHOLE FRAME AND COVER

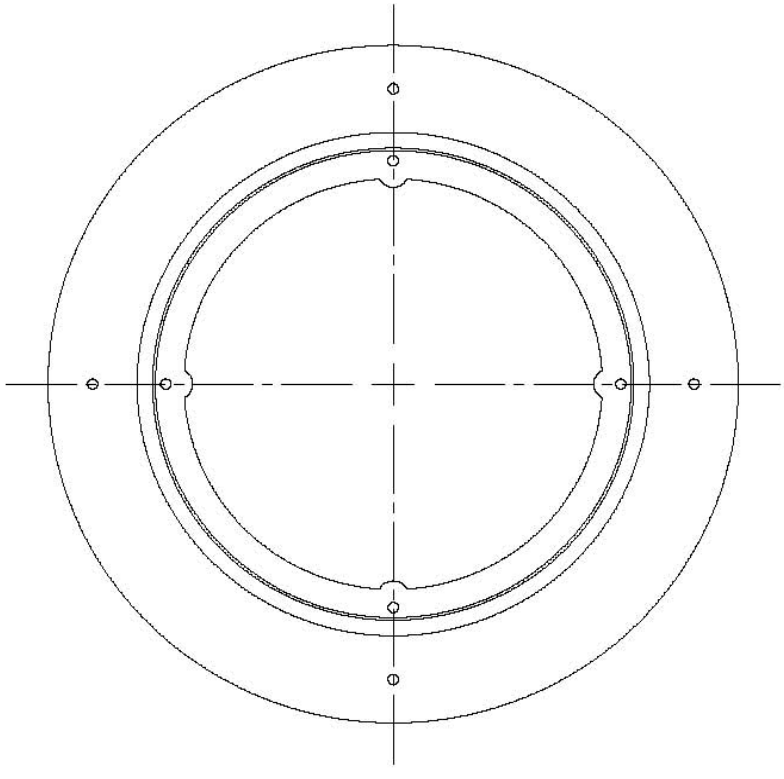

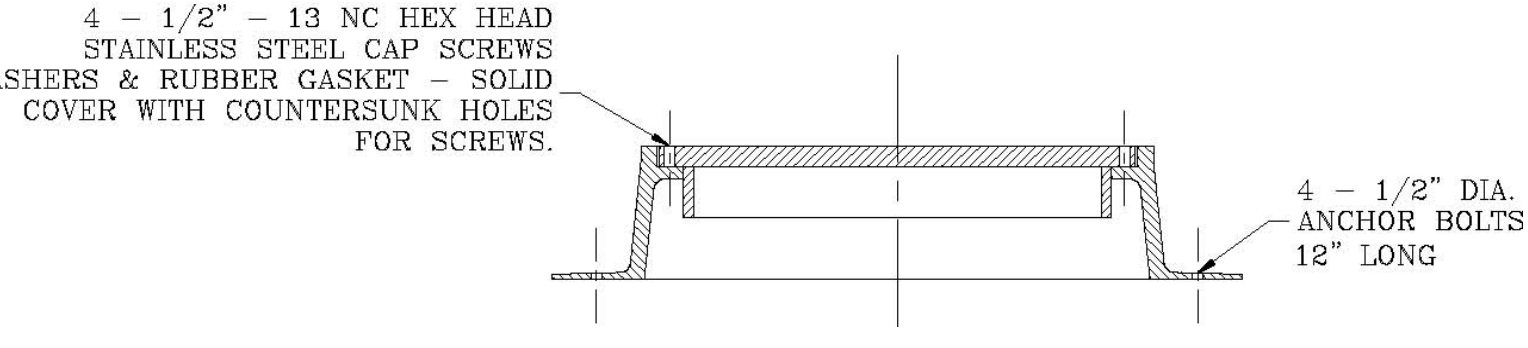

**3.6.2*CLAY PIPE**

All of the tests and inspections outlined in ASTM C700 shall be performed by the testing company except the acid resistance test. The procedure for testing clay pipe for crushing strength and absorption shall conform to the requirements of ASTM C301 using the minimum values of crushing strength outlined in these specifications.

**3.6.3*NON-REINFORCED CONCRETE PIPE**

All of the tests and inspections outlined in ASTM C14, shall be performed by the testing company except the permeability and hydrostatic test. The procedure for testing concrete pipe for crushing strength and absorption shall conform to the requirements of ASTM C14 using the minimum values of crushing strength outlined in these specifications.

**3.6.4*REINFORCED CONCRETE PIPE**

All of the tests and inspections outlined in ASTM C76, shall be performed by the testing company except compression tests for concrete design strength. The compression strength may be required by the County. The procedure for testing the reinforced concrete pipe for crushing strength and absorption shall conform to the requirements of ASTM C76.

**3.6.5*PVC - D-3034, SDR 35**

**TESTING**

Testing of PVC sewer pipe joints, when so directed by the Engineer, shall be made in accordance with ASTM D-3034 and D-3212 with modification as specified below. All equipment necessary to conduct the pipe joint test shall be provided by the Contractor.

A. TEST SPECIMENS

The Engineer or his authorized representative may initially and periodically select random sewer pipe for test purposes. The tests shall be performed on not less than two (2) specimens and not more than one percent (1%) of the total pipe length of each size and joint type required for the project.

B. DROP IMPACT TEST

Pipe (6” long section) shall be subject to impact from a free falling tup (20 lb. Tup A.) in accordance with ASTM Method of Test D2444. No shattering or splitting (denting is not a failure) shall be evident when the following energy is impacted:

C.TEMPERATURE FOR TESTING

Pipe shall be designed to pass all tests at 73°F (+-3°F).

D. PIPE STIFFNESS

Minimum “pipe Stiffness” F/Δy) at five percent (5%) shall be forty-six (46) psi for all sizes when tested in accordance with ASTM Method of Test D-2412, “External Loading Properties of Plastic Pipe by Parallel-Plate Loading.”

E. JOINT TIGHTNESS

Two (2) sections of pipe shall be assembled in accordance with the manufacturer’s recommendation. Joint shall be tested in accordance with ASTM D3212, “Joints for Drain and Sewer Plastic Pipe Using Flexible Elastomeric Seals.”

F. FLATTENING D-3033

There shall be no evidence of splitting, cracking, or breaking when the pipe is tested as follows:
Flatten specimen of pipe, six inches (6”) long between parallel plates in a suitable press until the distance between the plates is forty percent (40%) of the outside diameter of the pipe. The rate of loading shall be uniform and such that the compression is completed within two (2) to five (5) minutes.

G. PIPE AND FITTING DIMENSIONS D-2122

H. EXTRUSION QUALITY D-2152

**3.6.6*ABS/PVC COMPOSITE PIPE D-2680**

Testing of ABS/PVC Composite Pipe, when so directed by the Engineer, shall be made in accordance with ASTM D-2680. All equipment necessary to conduct these tests shall be either provided by the manufacturer or the Contractor.

1. Conditioning and test conditions as per D-2680.
2. Stiffness and deflection as per D-2412.
3. Acid conditioning as per D-2680.
4. Joint and fitting tightness as per D-2680.
5. Extrusion Quality as per D-2152.
6. Dimensions as per D-2122.
7. Concentric tube thickness as per D-2122.
8. End squareness as per D-2680.

**3.7*"SHORTS"**

**3.7.1*GENERAL**

"Shorts" shall mean lengths of gravity pipe which are shorter than the standard full lengths produced. They must be available in lengths of two feet (2'), three feet (3'), four feet (4'), and five feet (5'). Each "short" shall have the same joints on each end of pipe as supplied on the full length pipe. The number of "shorts" required will be determined by the County. They shall be installed at the following typical places:

1. Adjacent to other structures
2. Changes in the gradient of the original trench excavation
3. Changes from rock excavation to earth excavation
4. Providing the proper location of services
5. Elsewhere, as directed by the County

The strength classification for the "shorts" shall be no less than the strength classification of pipe specified for the full length pipe in the respective spans.

**3.8*GRAVITY SERVICE LINE**

Sanitary sewer service pipe shall be vitrified clay, cast iron, ABS or PVC composite sanitary sewer pipe, PVC ASTM D-3034, SDR 35, or SDR 23.5. This service pipe shall meet the other sections of these specifications covering the respective type of material and joints.

**3.9*FLEXIBLE COUPLINGS**

Where the use of flexible couplings is required to join pipes, they shall be Mission, Fernco, or approved equal.

Return to Table of Contents
Return to Sanitary Engineering Department home page

# SECTION 4

## 4*MANHOLES

### 4.1*GENERAL

Manholes shall be watertight structures of precast or cast-in-place construction. If castin-place manholes are considered, they must have a watertight flexible rubber type gasket joint at the barrel connections and all of the materials and details must meet the approval of the County prior to use on the project.

### 4.2*PRECAST MANHOLE BASES

All precast manhole bases shall meet the material and test requirements of ASTM Specification C478, "Precast Reinforced Concrete Manhole Section." The bottom of all pipes entering a precast base shall be at least three inches (3") above the base so that final channel may be installed and shaped. The installation of the final channel may be done either in the field or at the point of fabrication of the precast base. The top of the precast base shall extend above the top of the main line sewer pipe.

Where pipes twenty-four inch (24") diameter and smaller enter manholes, the connection shall be made through a flexible joint. The manhole connection shall be "Dura-Seal III," as manufactured by Dura-Tech, Inc.; Kor-N-Seal I as manufactured by NPC, Inc.; "PSX," as manufactured by Press-Seal Gasket Corporation; or approved equal. Manhole bases for sewer pipe up to and including eighteen-inch (18") diameter shall have an inside dimension of four feet (4') diameter. Manhole bases for sewer pipes twenty-one inches (21") and twenty-four inches (24") shall have an inside diameter of five feet (5').

Precast manhole bases for sewer pipes twenty-seven inches (27") through thirty-three inches (33") shall have an inside diameter of five feet (5') and shall have precast holes in the base of sufficient size to allow installation of the pipe sewer with flexible joint material conforming to Section 4.2, Paragraph 2.

Precast manhole bases for thirty-six inch (36") through forty-eight inch (48") sewer pipe shall be tee sections with an integral forty-eight inch (48") diameter riser. Change in alignment shall be made by installation of a bend of suitable diameter and deflection installed on the high side and immediately adjacent to the manhole tee section.

Precast manhole bases for fifty-four inch (54") through sixty-inch (60") sewer pipe shall be tee sections with main line being largest size pipe and "tee" being a forty-eight inch (48") offset stub in line with the outside of main line pipe. Changes in pipe size and/or alignment shall be made by installation of an eccentric reducer and a bend of the same diameter as main line pipe installed on the high side and immediately adjacent to the manhole tee sections. Lifting holes in precast manhole bases shall be blind.

### 4.3*PRECAST MANHOLE RISER (BARREL SECTION)

Precast manhole riser sections, cones and flat slab tops shall conform to the requirements of ASTM C478, "Precast Reinforced Concrete Manhole Section." Lifting holes shall be blind.
Joints for precast manhole sections shall conform to the requirements of ASTM Specification C443, "Joints for Circular Concrete Sewer and Culvert Pipe, Using Flexible, Watertight, Rubber Gaskets."
Where base section of manhole is larger than forty-eight inch (48") diameter, an eccentric reducer from base size to forty-eight inches (48") shall be furnished and installed directly above the base section.
Precast riser sections shall be forty-eight inches (48") in diameter and be in increments of sixteen inches (16") of height. The completed barrel shall contain a minimum number of sections.

**4.4*PERCAST CONES**

The conical top section shall be a minimum of thirty-two inches (32") in height and coverage from a forty-eight inch (48") diameter opening to a minimum opening of twenty-four inches (24"). The wall thickness shall be five inches (5") at the forty-eight inch (48") section and eight inches (8") at the top of the cone. Eccentric cones only shall be used.

The cones for pressure top manholes shall have four and one-half inch (4 1/2") diameter anchor bolts and sleeves cast within when fabricated.

**4.5*FLAT SLAB MANHOLE TOPS**

When a manhole is too shallow to permit a cone, a six-inch (6") forced concrete flat slab top shall be furnished. The slab shall contain a minimum of one-half inch (1/2") diameter reinforcing rods located at no more than center spacing. The concrete used for casting the slab top shall have a minimum twenty-eight (28) day strength of 4,200 psi.

**4.6*MANHOLE STEPS**

No manhole steps are to be installed in manholes.

**4.7*MANHOLE FRAME AND COVERS**

The manhole frames and covers, both solid or with holes as specified in the General Notes, shall be Neenah Catalog No. R-1767 or East Jordan Iron Works No. 1600. For a watertight manhole, they shall be Neenah Catalog No. R1916-D or East Jordan Iron Works No. 1600 PT.

The manhole frames and covers shall be constructed of first quality gray iron or high strength, semi-steel in accordance with ASTM A48, Class 30. The compound materials shall produce a tough, gray metal, close and even grained, soft enough to permit drilling and machining, and capable of showing indentations from a sharp blow of a hammer, without flaking.

The castings shall be free from dirt, grease, sand, scale, or other foreign substances.

All manhole covers, seating frames, and adapter rings shall be machined to a firm and even bearing and fit truly into the frames. The manufacturer's name shall be cast upon the manhole covers and frames in one-inch (1") letters, one-eighth inch (1/8") in relief.

**4.8*DROP ASSEMBLIES**

Drop assemblies shall be installed where the change in elevation of pipes through a manhole exceeds thirty inches (30"). Drop manhole assemblies shall consist of a standard tee of the main line pipeline diameter with the spur diameter as specified on the standard drawings. The riser pipe, the standard short elbow, and the short hub section shall be the same material as the main line. The entire assembly shall be encased in a minimum of six feet (6') of concrete. See Section 3.6 "Installing Manholes" of Section C -Construction Procedures. In lieu of the above-mentioned assembly, Dura-Crete's drop manhole barrel, or approved equal, may be used.

**4.9*VENTING ASSEMBLIES**

Manhole venting assemblies shall be constructed of four-inch (4") ductile iron pipe and fittings. The locations of venting assemblies with the individual length of run and height of rise and elevation of vent are shown on the construction drawings.

# GREENE COUNTY OFFICE OF SANITARY ENGINEERING
# VILLAGE OF SPRING VALLEY
# CONCRETE SEPTIC TANK DETAIL

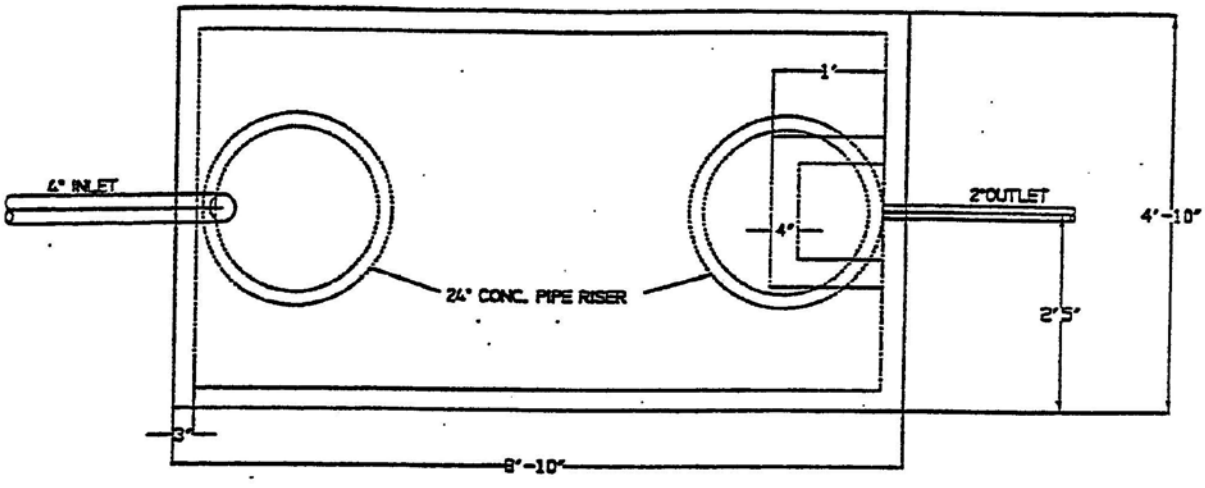


NOTE :
ONE LID TO BE SOLID
THE OTHER MUST BE VENTED WITH SEWER GUARD.

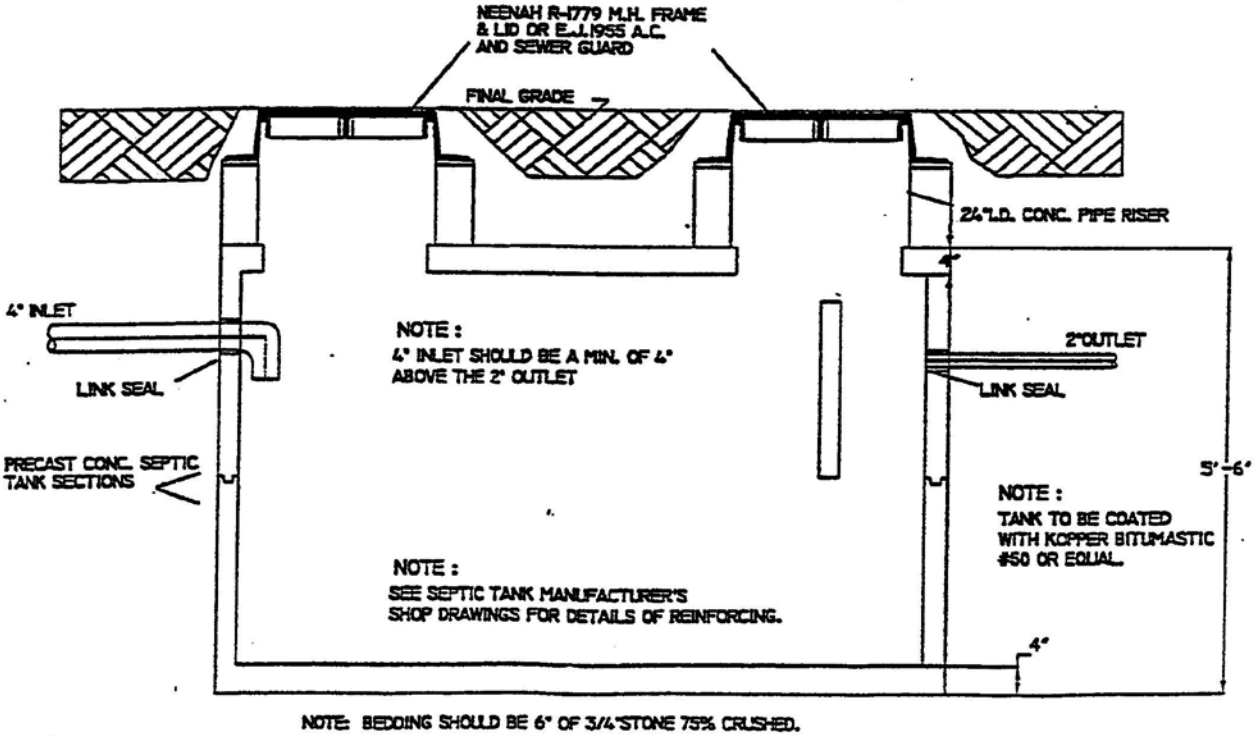


NOTE: BEDDING SHOULD BE 6" OF 3/4"STONE 75% CRUSHED.

TANK SHOULD BE A MIN. 1,000 GAL.

# SECTION 5

## 5*TRENCH MATERIALS

### 5.1*PIPE BEDDING-DESCRIPTION
Refer to Section 3.3 "Bedding" of Section C - Construction Procedures and related drawings.

### 5.2*GRAVEL BACKFILL

#### 5.2.1*DESCRIPTION
Gravel backfill, where required, shall conform to the specifications of the governing township, or municipality.

#### 5.2.2*GRAVEL BACKFILL SAMPLES
Samples of the gravel backfill used to determine compliance with the governing township, or municipality specifications shall show the true nature and condition of the materials they represent. No lumps, clumps of clay, humus or any other material shall be removed from the sample prior to analysis.

### 5.3*CONCRETE ENCASEMENT, CRADLE AND BEDDING

#### 5.3.1*STRENGTH
The concrete used for encasement and cradle shall have a minimum twenty-eight (28) day compressive strength of 4,200 psi.

#### 5.3.2*REINFORCING STEEL
The construction drawings show the locations, lengths, sizes, and numbers of reinforcing bars required. The reinforcing steel shall conform in all respects to ASTM Specifications A305, "Deformed Steel Bars," A15, "Billet Steel Bars," A16, "Rail Steel Bars," and A160, "Axle Steel Bars."

### 5.4*GROUT
Grout used for sealing around pressure pipe lines passing through walls, twenty-seven inch (27") through thirty-three inch (33") diameter gravity pipe lines passing through manholes and for sealing tunnel liner plates shall consist of the following materials:

#### 5.4.1*FINE AGGREGATE
Fine aggregate shall conform to OHIO CM, Section 703.03.

#### 5.4.2*COARSE AGGREGATE
Coarse aggregate shall conform to OHIO CM, Section 702.02, Size Number 89.

#### 5.4.3*PORTLAND CEMENT
Portland cement shall conform to OHIO CM, Section 701.04.

#### 5.4.4*ADMIXTURE
An admixture, the equal of "Embico" manufactured by Master Builders, to prevent shrinking of the grout shall be added according to the manufacturer's instructions.

#### 5.4.5*COMPRESSIVE STRENGTH
The grout shall have a minimum twenty-eight (28) day compressive strength of 4,200 psi.

### 5.5*COVER PIPE

#### 5.5.1*GENERAL
The construction drawings show the details of the cover pipe material.

**5.5.2*STEEL PIPE**

Where designated on the construction drawings, the steel pipe shall be fusion welded steel pipe, Grade "B" with no coating. It shall conform to the requirements of ASTM 139. The wall thickness shall be as shown on the following table:

| TABLE OF MINIMUM WALL THICKNESS FOR STEEL CASING PIPE Nominal Thickness - Inches | | | |
|---|---|---|---|
| Uncoated and Unprotected | Nominal Diameter Inches | Uncoated and Unprotected | Nominal Diameter Inches |
| 0.251 | Under 14 | 0.469 | 28 & 30 |
| 0.282 | 14 & 16 | 0.501 | 32 |
| 0.313 | 18 | 0.532 | 34 & 36 |
| 0.344 | 20 | 0.563 | 38, 40, & 42 |
| 0.375 | 22 | 0.626 | 48 |
| 0.407 | 24 | 0.688 | 54 |
| 0.438 | 26 | | |

**5.5.3*CORRUGATED METAL PIPE**

Where corrugated metal pipe is designated in the construction drawings beneath a highway, it shall conform to OHIO CM, Section 707.01. The gauge shall be as shown on the construction drawings.
Where corrugated metal pipe is designated in the construction drawings beneath the tracks of a railroad, it shall be AREA Specification 1-4-6; with bituminous coating, in accordance with AREA Specification 1-4-13. The gauge shall be as shown on the construction drawings.

**5.5.4*TUNNEL LINER PLATES**

Tunnel liner plates, where shown on the construction drawings, shall be hot-dipped, galvanized steel of the thickness (gauge) and section modulus shown on the construction drawings. The plates shall be formed from steel meeting the requirements of ASTM 139, Grade "B." Individual liner plates shall be made of one (1) piece of metal, provided with flanges for both longitudinal and circumferential joints. The joints shall have sufficient bolt holes to fully develop the strength of the individual liner plate and so spaced in each liner plate that liner plates of curvature will be interchangeable and readily handled in the tunnel. Liner plates shall be of a design that when bolted together, no opening shall exist large enough to permit inflow of granular material. Liner plates will be accurately curved to suit the tunnel cross section and, when bolted together, the finished casing pipe shall be full round with the nominal diameter to the neutral axis as specified on the construction drawings. Grouting plugs shall consist of a two-inch (2") standard half-pipe coupling welded or tapped into a hole in the liner plate and furnished with a cast iron plug for closure. The spacing of the grouting plugs will be as specified on the construction drawings. The bolts supplied with the tunnel liner plates shall be of the size and specification required to permit the full development of the strength of each individual liner plate without failure of the fasteners. Bolts, heads and nuts shall be square and of the same size.

# SECTION 6

## 6*RESTORATION

### 6.1*TOP SOIL

#### 6.1.1*GENERAL
Imported topsoil shall meet the requirements of OHIO-CM 653.02.
It shall also be reasonably free from subsoil, clay lumps, stones, roots, or similar objects larger than two inches (2”) in diameter, brush, objectionable woods or litter, or any other materials or substitutes which may be harmful to plant growth or a hindrance to grading, plant cultivating, or mowing.

### 6.2*STREET

#### 6.2.1*GENERAL
The street restoration materials shall meet the following specifications:

#### 6.2.2*BASE COURSE
The base course shall be the equal of OHIO-CM 304-02.

#### 6.2.3*BITUMINOUS SURFACE TREATMENT
This type of surface restoration shall include the application of a prime coat, a seal coat and cover aggregate. These materials shall meet the following OHIO-CM Specifications: Prime Coat - MC-70 or RT-2 - 0.5 gallons per square yard. Seal Coat - MC-3000, RT-8, CBAE-2, MS or MS-2 at 0.5 gallons per square yard. Cover Aggregate - Shall meet the requirements of OHIO-CM 408.03.

#### 6.2.4*ASPHALTIC CONCRETE
Asphaltic concrete shall conform in all respects to the requirements of OHIO-CM, Item 404. The asphaltic concrete shall be plant mixed, delivered, spread and compacted according to OHIO-CM-401.

### 6.3*JOINT SEALING
Regulations and Specifications Greene County, Ohio Part B--Construction Materials
Joints between new surface restoration and existing asphaltic concrete must be sealed with the same bituminous material used in the mixture of the asphaltic concrete.

### 6.4*SOD
Sod shall be well-rooted Kentucky Blue Grass (poa pratensis) containing a growth of not more than thirty percent (30%) of other grasses and free from all noxious weeds. The sod shall be covered with grass recently mowed to a length of not more than three inches (3”).

### 6.5*SEED
Seed shall consist of the following mix: 50% Annual Rye Grass
50% Blue Grass

### 6.6*FERTILIZER
Fertilizer will be a 12-12-12 mixture.

### 6.7*CONCRETE
Concrete for replacing concrete street pavements, concrete driveways, concrete curbs and concrete sidewalks shall have a minimum twenty-eight (28) day compressive strength of 4,200 psi.

# Regulations and Specifications
# Greene County, Ohio
# PART C - Construction Procedures
## SECTION 1

**1*GENERAL**

**1.1*CONSTRUCTION SITE**
The construction area is the site of all the actual phases of the work described including delivery and storing of material and all vehicular traffic related thereto. The construction area shall be confined to the limits of the public right-of-way in streets, the limits of the construction easements on private property as set forth by the County or to the designated plots of ground belonging to the Owner.

**1.2*CLIMATIC CONDITIONS**
All work which will be affected by climatic conditions (wind, rain, frost or freezing) shall be suspended unless permission is given by the County to proceed. Whenever work proceeds under any such conditions, the Contractor shall provide approved facilities for protecting all the materials and the finished work. This will include heating of materials if required for their proper installation.

**1.3*PUBLIC ACCESS**
The Contractor shall provide and maintain temporary access to all properties in which such access was interrupted by the construction of this project.

**1.4*STORING OF MATERIALS**
Materials required in the work may be stored on the sides of the roadway and/or upon the site of the project, if directed by the County, but all such materials, tools, and machinery, shall be neatly and compactly piled in such a manner as to cause the least inconvenience to the property owners and to traffic.
Materials, tools and machinery shall not be piled or placed against shade trees, unless said trees shall be amply protected against injury therefrom. All materials, tools, machinery, etc., stored upon public thoroughfares must be provided with warning lights, signs, and barricades to alert traffic of such obstructions. The lights shall be illuminated from sunset to sunrise.

**1.5*GENERAL EXCAVATION**
Excavation shall be limited to the rights-of-way, easements or lands controlled by the Owner or County.

**1.6*OPEN EXCAVATION**
All excavations within public right-of-way limits shall be completely closed at all times when there is a delay in the progress of the work. The Contractor shall provide suitable lights, signs and barricades to adequately warn the public. The lights shall be illuminated sunset to sunrise.

**1.7*SHEETING AND SHORING**
The Contractor shall furnish, put in place and maintain such piling, sheeting, bracing, etc., as required by the Industrial Commission and the Department of Industrial Relations, state of Ohio, in their Bulletin No. IC-3, Specific Safety Requirements Relating to Building and Construction Work, as revised.

## 1.8*REMOVAL OF WATER

All excavations must be kept dry for laying pipe or for placing concrete.
The Contractor shall provide at all times during the construction, adequate equipment for the removal of water and like wastes from all excavations. The disposal of the water and wastes shall be in such a manner as not to interfere with the proper construction of pipe lines or masonry.
The Contractor shall not dispose of ground and/or surface water into newly constructed sanitary sewers or existing sanitary sewers. Connection of newly constructed sanitary sewers to existing system shall not be made until authorized by the County.

## 1.9*ROCK EXCAVATION

The Contractor shall exercise all possible care in any blasting to avoid injury to persons and adjacent property. The rock shall be well covered and sufficient warning shall be given to all persons in the vicinity of the work before blasting. Proper care shall be exercised to avoid injury to water pipes or other structures either below or above ground. Caps or other exploders shall not be kept in the same place in which dynamite or other explosives are stored. All federal, state or local regulations covering the use of explosives shall be strictly observed, and in addition, the Contractor shall conform to any further regulations, which the County may deem necessary in this respect.

The Contractor shall remove all rock that is shattered below grade due to a too deep drill hole, a too heavy charge of explosives or for any other reason, and refill the excavation to the required grade with compacted gravel.
Excavated rock shall be disposed of by the Contractor and shall not be used for backfill.

## 1.10*UNSUITABLE FOUNDATION

If the County determines that the material at or below the normal grade of the bottom of the pipelines or structures is unsuitable for foundation, it shall be removed to such depths and widths as the County may direct and be replaced by the Contractor with such material as the County may direct Sanitary sewers and water mains constructed on fill material shall require fill material to be compacted to 95% standard Proctor.

## 1.11*UNAUTHORIZED EXCAVATION

Any excavation not authorized by the County beyond the limits required for the proper construction shall be backfilled by the Contractor with materials approved by the County.

## 1.12*REMOVAL OF EXCAVATED MATERIAL

For trenches located within roadway rights-of-way, the excavated material shall be disposed of directly by the equipment excavating the trench into appropriate type carriers which will transport the excavated material from the site of the construction. The street surface will be brushed and cleaned during the construction period so that excess material is immediately removed as it drops from the construction trucks and equipment. The Contractor shall exercise extreme care to protect an existing street surface and base adjacent to the open trench excavation from failures due to the loads of the construction trucks and equipment.
It will be the Contractor's responsibility to dispose of all the excavated material unless the plans or the specifications show or direct otherwise.

## 1.13*STORAGE OF EXCAVATED MATERIAL

When excavated material is to be used as trench backfill, the excavated material shall be placed so that free access may be had at any time to all parts of the work. The excavated material shall be neatly piled to cause as little inconvenience to the general public as possible.

## 1.14*HANDLING PIPE

All pipes shall be protected during shipping, unloading, and lowering into the trench against impact, shocks, and free fall. No lifting hook or other device shall be used over the end of a section of pipe which may damage the pipe ends or barrel during unloading or lowering of the pipe into the trench.

Pipe shall be so handled that the coating and lining will not be damaged. If, however, any part of the coating or lining is damaged, the repair shall be made by the Contractor in a manner satisfactory to the County.

The Contractor shall be responsible for the safe storage of material furnished by or to him, and accepted by him, and intended for the work, until it has been incorporated in the completed project. The interior of all pipe, fittings, and other accessories shall be kept free from dirt and foreign matter at all times.

## 1.15*DEFECTIVE PIPE

The Contractor shall carefully inspect for cracks and other defects prior to installation. The pipe and fittings will be subject to an inspection by the County in the field. The County may reject any unsuitable pipe in the field even though it may bear a stamp showing plant testing. All defective materials furnished by the Contractor shall be promptly removed by him from the site of the project.

## 1.16*CONCRETE ENCASEMENT AND CRADLE

Buried pipelines shall be encased or cradled where shown on the construction drawings or to the extent and/or at other locations as determined by the County. Buried pipelines shall be encased when one of the following applies:
A. When shown on the drawings.

B. When the pipeline has less than three feet (3') of cover between the invert of the ditch or creek and the top of the pipe.

C. When there is less than ten-foot (10') separation (horizontally) and eighteen-inch (18") clearance (vertically) between the pipeline being installed and any other pipelines in the area (sewer, gas, electric, etc.).
Concrete encasement shall provide a minimum concrete thickness of six inches (6") beneath and above the pipe O.D. and shall extend laterally to the undisturbed wall of the pipeline trench. Additional thickness of concrete encasement, if required, shall be shown on the construction drawings. (See detailed drawing on Page 4 of this section.)

Concrete cradle shall be installed where shown on the construction drawings. These drawings will also show the dimensions of the cradle required.

All encasement and cradle shall be reinforced. The construction drawings will show the size and spacing of the reinforcing steel.

Granular bedding materials shall not be required for any buried pipeline encased or cradled in concrete. Pipelines to be encased or cradled shall be supported firmly in place so that the pouring of the concrete encasement or cradle will not alter the established line and grade. Initial backfill material shall not be required for pipelines encased in concrete. In areas subject to flooding or stream meandering, backfill shall consist of large stone not less than two inches (2") in diameter or other material suitable for preventing erosion if approved by the Sanitary Engineer.

## 1.17*INSTALLING COVER PIPE

### 1.17.1*GENERAL

Cover pipe shall be installed by the boring method, the jacking method or by tunneling as shown on the construction drawings. The Owner will obtain permits for any railroad, state or federal highway crossings. The Owner shall coordinate scheduling of construction of crossings with railroads and highway departments and shall pay any charges established therefore for work accomplished by these outside agencies. Special construction requirements defined by railroads or highway departments will be shown on the construction drawings and shall be adhered to by the Contractor. Installation of cover pipe shall not commence without the written permission of the County.

The annular space between the cover pipe and the contained carrier pipe shall not be filled with grout or with granular materials unless so specified on the construction drawings. Rubber wrap around or pull-on end seals for casing pipe (cover pipe) shall be required. Stainless steel casing spacers shall be required as per manufacturer's recommendations.

**1.17.2*INSTALLATION BY BORING**

Steel pipe shall be installed by the boring method utilizing an auger type boring machine or a machine of such design meeting the individual requirements of the railroad, state or federal highway system being crossed. The Contractor shall provide an approach pit, completely sheeted and of sufficient size to operate the boring equipment and to receive twelve-foot (12') lengths of pipe. The operation of the boring equipment shall be subject to continuous checking by the Contractor to insure proper alignment of the cover pipe as installed.

**1.17.3*INSTALLATION BY JACKING**

The Contractor will provide an approach pit for the jacking operation, excavated so the jacking face is a minimum of three feet (3') above the pipe. This open face should be shored securely to prevent displacement of the embankment. The pit shall include a backstop of sufficient size to take the thrust of the jack. The guide rails that support the pipe as it enters the bore shall be accurately placed to line and grade. The entire approach pit shall be sheeted.

Hydraulic or mechanical jacks may be used in this operation. The number of jacks and the capacity of the jacks shall be adequate to complete the operation. A jacking head shall be used to transfer the pressure from the jacks and the jacking frame to the pipe. If an auger is used, the pipe shall be jacked simultaneously with the augering. The construction work shall be checked by the Contractor at frequent intervals to insure proper line and grade of the installation.

# Concrete Encasement Detail

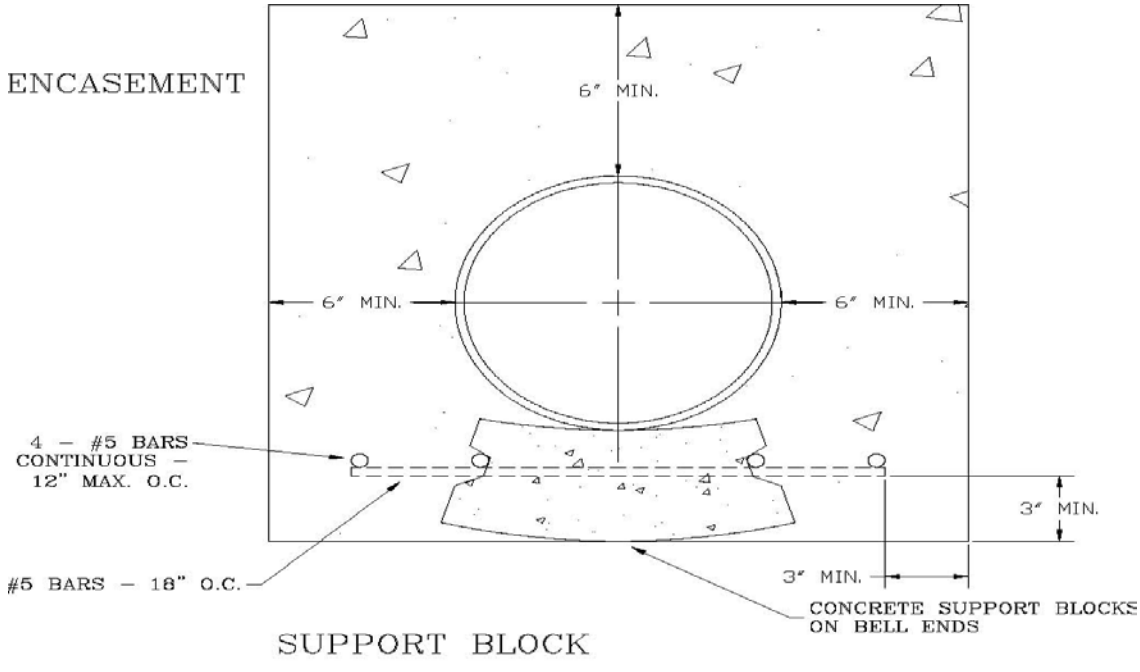


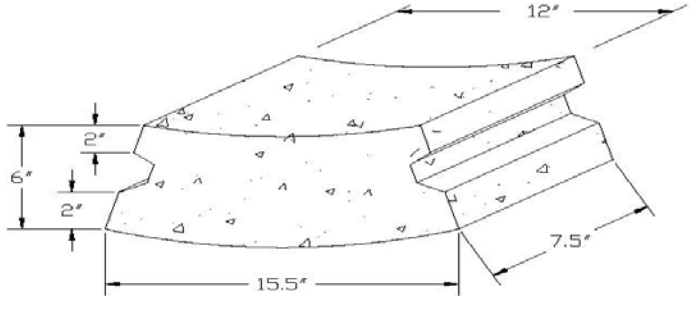

# Concrete Cradle Detail

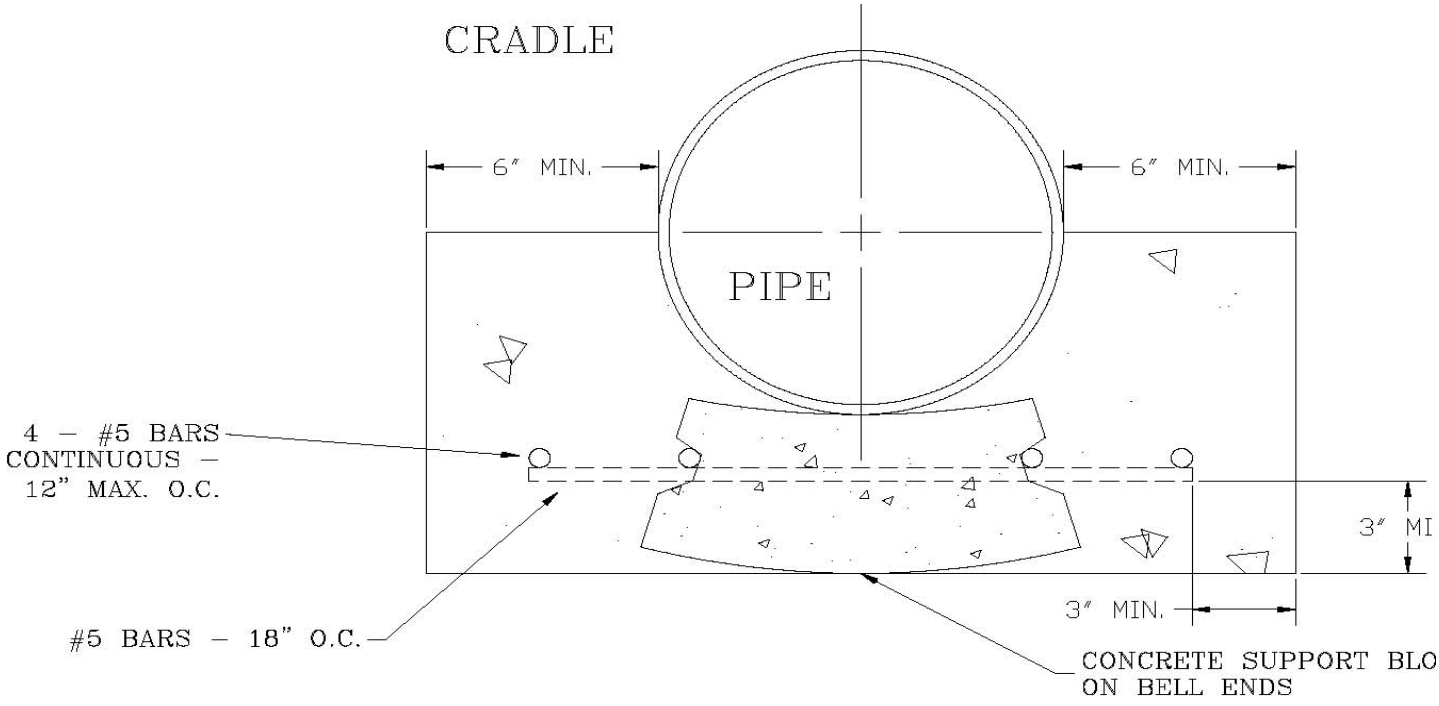


SUPPORT BLOCK

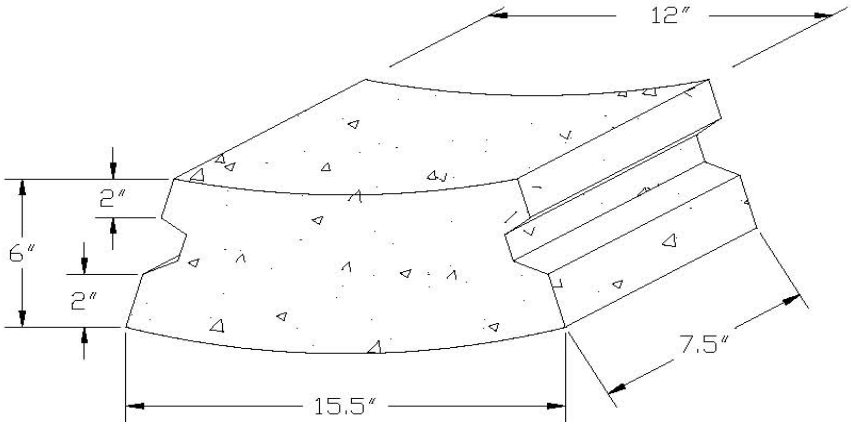

## 1.17.4*INSTALLATION BY TUNNELING

Care shall be exercised in trimming the surface of the excavated section to a true line and grade with the excavation conforming to the outside of the tunnel as nearly as possible. In the installation of tunnel or shaft liner plates, the amount of unsupported tunnel or shaft wall shall be at a minimum at all times. Excavation ahead of the liner plates will not be permitted. Liner plates shall be placed promptly as excavation permits. Upon completion of any ring of liner plates, bolts shall be retightened in the two (2) rings previously completed. The County may direct that the top half of the tunnel excavation be supported by a cutting shield, and excavation shall not advance ahead of such support.

The vertical face of the excavation shall be supported, as necessary to prevent sloughing and at any interruption of the tunneling operation, the heading shall be completely bulkhead.

Grouting shall follow the excavation and lining of the tunnel or shaft as required to fill all voids outside the tunnel liner plates. Grouting shall be performed prior to or upon completion of the installation of a maximum of four (4) rings, unless otherwise directed by the County. Grouting shall start at the lowest hole in each grout panel and proceed upwards progressively and simultaneously, when possible, on both sides of the tunnel. The machine used for grouting shall be capable of forcing grout, under pressure, into all voids.

## 1.18*GENERAL RESTORATION

The Contractor shall provide for protection of existing streets and structures; the maintenance of streets, driveways, sidewalks, curbs, gutters, reseeding and resodding; removal of trees; restoration of agricultural land; and the maintenance of the construction area during progress of the work and the complete restoration of the construction area to its original condition at the completion of the work.

The Contractor shall continuously carry on with the final restoration of the construction area after the backfilling is completed, and as directed by the County. He shall proceed to restore to its original condition all streets, driveways, sidewalks, curbs, gutters, structures, and all areas that were damaged, disturbed, or occupied by the Contractor in connection with any phase of the work.

Pavements, trees, shrubbery, fences, poles, or other property and surface structures which have been damaged, removed or disturbed by the Contractor, whether deliberately or through failure to employ usual and reasonable safeguards shall be replaced at the expense of the Contractor.

## 1.19*RESTORATION OF AGRICULTURAL LAND

Existing top soil along pipe line excavations in cultivated fields shall be removed and stockpiled separately from the balance of the excavated material. The top soil shall be replaced to a minimum depth equaling that of the in-place soil in the backfilled excavation, neatly rounded over the top of the trench to a sufficient height to allow for settlement. The replaced top soil shall not contain rock and stones from the excavated material below the depth of the original top soil.

## 1.20*TREES AND SHRUBS

Trees and shrubs located on private rights-of-way, which interfere with the construction operation, may be removed by the Contractor only within the limits of the temporary construction easement obtained by the Owner; however, care shall be exercised to prevent damage to or removal of trees and shrubs which do not actually interfere with the Contractor's operations. If trees are necessarily removed, the tree stumps shall also be taken out of the ground.

Trees or shrubs which may not be disturbed shall be indicated on the construction drawings. Repair or removal and replacement of any such designated trees or shrubs shall be at the Contractor's expense.
Trees and shrubs outside of the temporary construction easement shall not be trimmed, removed or otherwise disturbed by the Contractor except with the express written permission of the Owner of the property. Such written permission shall be the responsibility of the Contractor to obtain with a copy being sent to the County and any expense involved shall be covered by the Contractor.

Any trees or shrubs not authorized for removal, as detailed above, which are damaged by the Contractor's operations shall be removed or satisfactorily repaired by the Contractor under the direction of the County.

All branches, trunks, stumps and brush, removed during the construction operations shall be hauled from the project site and disposed of by the Contractor. Burning of these items shall not be permitted on the project site.

**1.21*GRASS PLOTS**

All grass lawns, noted on the construction drawings or in the Contract Documents disturbed during construction shall be resodded. All other disturbed areas except cultivated agricultural land or paved areas shall be reseeded.

**1.22*SODDING**

The sod shall be cut into rectangular sections which may vary in length from three feet (3') to six feet (6') and shall be of a uniform width not to exceed eighteen feet (18'). The depth of cut shall be equal to the growth of the fiberous roots, but in no case less than two feet (2'). All sod must be delivered to the job site within twenty-four (24) hours after being cut and shall be installed within thirty-six (36) hours after being cut. During dry weather, sod shall be watered before lifting to prevent the dropping off of the soil during handling and to insure its vitality.

The sod bed shall be prepared so that the surface of the sod material after placing shall be flush with the surrounding ground surfaces. The sod bed shall consist of a minimum of six inches (6") of excavated topsoil and be leveled, free from all clay lumps, stones or other deleterious material. The surface of the sod bed shall be loosened by raking and moistened before the sod is laid. After laying, the sod shall be watered thoroughly and tamped with approved sod tampers sufficiently to incorporate the sod with the sod bed and to insure tight joints between adjacent strips of sod. The sod bed shall be fertilized at the rate of two pounds (2 lbs.) per one hundred (100) square feet of bed.

It shall be the responsibility of the Contractor to maintain proper moisture content of the sod and sod bed consistent with climatic conditions until the completion of the construction contract.

**1.23*SEEDING**

Seeded areas shall be fertilized after top soil has been placed in the backfilled trench. Dry fertilizer shall be applied at the rate of twenty pounds (20 lbs.) per one thousand (1,000) square feet and thoroughly raked into the soil at a depth of not less than one inch (1"). Liquid fertilizer shall be applied in the manner recommended by the supplier of the fertilizer. The soil shall then be hand raked to a finely divided planting surface and uniformly sown with clean lawn grass seed at the rate of three pounds (3 lbs.) per one thousand (1,000) square feet. The completed seed area shall be covered with a mulching material. The quality of the lawn seed shall be approved by the Project Director prior to sowing. Top soil shall be placed at a minimum depth of six inches (6") in a backfilled trench where seeding is required.

**1.24*STREETS, DRIVEWAYS, CURBS AND WALKS**

**1.24.1*GENERAL**

The completed restoration of the streets, curbs, and sidewalks within public rights-of-way must meet the approval of the County Engineer, the state of Ohio, Department of Highways, the Township Trustees or the Municipality, whichever has jurisdiction over said right-of-way.

The Contractor shall, insofar as is reasonably possible, maintain streets and driveways open and passable at all times. The replacement of concrete paving or foundations, or bituminous or asphaltic surfaces, or any other type of paving or resurfacing shall conform in workmanship and materials to the requirements for such work in the latest revision of the "Construction and Material Specifications," state of Ohio, Department of Highways.

Roadway, street and driveway pavements removed or damaged by the construction operation shall be replaced with the type of pavement damaged or removed in accordance with the applicable sections of these specifications.

The Contractor shall, upon completion of construction in public or private roadways, immediately restore the road surface to permit travel thereon, and maintain the same in that condition until he has received the approval of the County to proceed with the final restoration. The maintenance work shall constitute continuous, effective work with adequate equipment and forces to insure that the roadways and construction area are kept in a satisfactory condition at all times.

The Contractor will obtain the permits for the work involving state, federal, county, township or municipal roadways. The Contractor shall notify the highway officials in advance of construction to give them time to arrange for any required protection of traffic. The Contractor shall be responsible for the cost of protection of traffic or any other requirements relative to the work.

**1.24.2*REMOVAL OF EXISTING PAVEMENT**

The Contractor shall use such suitable equipment, tools, and methods for cutting and trimming which will remove the road surface materials to a neat line at the limits of the top of the trench or to the limits indicated on the construction drawings. The Contractor will not in any manner disturb or damage the sections of road base or road surface which are to remain in place. Disturbed or damaged sections of road base or surface outside the limits of the trench excavation shall be replaced at the expense of the Contractor. Power chisels or power saws shall be used whenever the type or density of existing road surface materials require such equipment to insure the road surface being trimmed to a neat line. If the amount of road surface removal is of sufficient width to warrant the use of power shovels, graders, maintainers or similar equipment, they shall be operated in such areas and in such a manner that will not violate the above provisions.

**1.24.3*AGGREGATE BASE COURSE**

A well compacted aggregate course shall be placed as a base for the restoration of paved areas in streets, roadways and driveways. The compacted base course shall be eight inches (8”) in thickness applied in two (2) or more equal layers with the maximum compacted depth of any one (1) layer not exceeding four inches (4”).

The aggregate base course shall be placed in the entire area where road base material was removed or destroyed by the excavation process. A suitable excavation to the lower limits of the base course shall be made prior to the placing of any aggregate base material if the area has been completely backfilled above this limit.

The aggregate base materials shall be evenly spread on the subgrade with suitable spreading machines or boxes capable of placing the aggregate true to grade. Approved hand placing methods may be used in small or irregular shaped areas where machine spreading is impractical. Each course of the aggregate base material shall be thoroughly compacted with rollers or vibratory equipment to provide a dense compacted thickness as specified.

All irregularities that develop in the surface of the aggregate base course, during compaction, shall be corrected by loosening the surface, adding or removing material and re-compacting until the surface presents a smooth, regular surface true to grade.

Any damage which is done to the finished aggregate base course by local traffic prior to surface treatment shall be repaired by loosening, reshaping, re-compacting, use of necessary water and the addition of more aggregate base course, if necessary. Reshaping and re-compacting operations shall be done at the expense of the Contractor.

**1.24.4*SCARIFYING, GRADING, SHAPING AND COMPACTING**

Existing surface treated streets and road shoulders, which are to be restored with bituminous surface treatment, shall be scarified to a depth of eight inches (8”) or to the bottom of an existing acceptable road base material if specified on the construction drawings. Stones three inches (3”) or larger in one (1) dimension which are brought to the surface in the scarifying process shall be removed from the construction site.

Additional base material may be added at the direction of the Project Director. Such material shall meet the requirements of base course, OHIO-CM 304.02.

The roadway area shall be shaped and graded to conform with the roadway section shown on the construction drawings. The section shall be thoroughly compacted to provide a firm, smooth base for the surface treatment.

**1.24.5*BITUMINOUS SURFACE TREATMENT**

The installation of bituminous surface treatment for a roadway pavement shall conform to the following OHIO-CM Specifications:

Prime Coat ..... OHIO-CM 408.01, .04, .05, .06, .07 and .08
Seal Coat ..... OHIO-CM 409.01, .04, .05, .06, .07 and .08

**1.24.6*ASPHALTIC CONCRETE**

The installation of asphaltic concrete for roadway and driveway pavements shall conform to OHIO-CM 401, as modified by OHIO-CM 404. The finished, compacted thickness of asphaltic concrete shall be two and one-half inches (2 1/2") applied in two (2) courses to a well compacted aggregate base course which has received a prior prime coat as specified (OHIO-CM408) or to a concrete base course as shown on the construction drawings.

A bituminous sealing material shall be placed on the joint between new and old pavement, curb or other structure to provide a watertight seal.

**1.24.7*CONCRETE PAVEMENT**

Replacement of concrete streets, driveways, or base courses shall consist of a single course of concrete having a minimum twenty-eight (28) day compressive strength of 4,200 psi constructed on prepared aggregate base. The thickness of the pavement replaced for concrete streets shall be the same as the original pavement or base course with a minimum of eight inches (8") of thickness. Forms shall be used on open sides so that the completed pavement has its original shape. Reinforcing, if required, will be as shown on the construction drawings. Concrete driveway minimum thickness shall be six inches (6"). Concrete pavement shall be removed by sawing for a minimum width of one-foot (1') outside the limits of the trench excavation.

**1.24.8*CONCRETE SIDEWALKS AND CURBS**

The Contractor shall restore all sidewalks and curbings to their original shape and dimensions if disturbed in any manner by the construction. Concrete for curbs and walks shall have a minimum twenty-eight (28) day compressive strength of 4,200 psi. Individual sections of sidewalk damaged shall be replaced full width and between adjacent lateral construction joints or dummy joints. Concrete shall be removed by sawing at the nearest joint or dummy joint. Minimum thickness of concrete sidewalks shall be four inches (4").

Sidewalks shall be placed on a well compacted, six-inch (6") thick base of materials corresponding to ODOT 310.02 Grading A. Curbing shall be placed in conjunction with roadway pavement on the base specified in Section 1.24.3.

**1.25*FUGITIVE DUST**

Air Pollution Control Regulation, Section 145, Restriction of Fugitive Dust, is applicable to this project. Contractors shall comply with this regulation.

**1.26*EROSION AND SEDIMENT CONTROL**

Erosion and sediment control measures are to be provided in accordance with local, regional, state, and/or federal policies and regulations.

# SECTION 2

## 2*PRESSURE PIPELINES

## 2.1*TRENCH EXCAVATION

### 2.1.1*GENERAL
Trenches for buried pressure pipelines shall be so excavated that the pipes and appurtenances may be installed and joined to the alignments and grades required.

### 2.1.2*TRENCH DEPTH
The depth of pressure pipeline trenches shall be a minimum of four and one-half feet (4 1/2') plus the outside diameter of the pipelines measured from the existing street grade or the proposed street grade if shown on the construction drawings. Excavation for depths greater or less than the minimum are shown in profile on the construction drawings with no depth being greater than seven feet (7') from the proposed final grade.

Pressure pipeline trenches shall be excavated in a manner that will provide a uniform and continuous bearing and support for the barrels of pipe on solid and undisturbed ground at every point between bell holes except for that area near the mid-section of the pipe disturbed by the withdrawal of pipe slings or other lifting tackle. Bell holes will be provided at each joint to permit the jointing to be made properly.

Rock, if present in the trench bottom, shall be excavated to a minimum depth of five inches (5") below the outermost dimension of the pipeline. Excavated rock shall be disposed of by the Contractor and not used for backfilling. Pressure pipe shall be bedded in rock with five inches (5") of #57, 75% crushed.

## 2.2*INSTALLING PRESSURE PIPELINES
The specifications for the installation of pressure pipelines are intended to conform with AWWA Specification C600, "Installation of Cast Iron Water Mains." The County shall require compliance with the specifications contained in AWWA C600, the same as if they were totally incorporated herein, except where these specifications direct otherwise.

Pressure pipelines shall be laid and maintained to the required lines and grades with fittings and valves set at the required locations, spigots centered in bells and all valves and hydrant stems plumb. All pipe and fittings shall be carefully examined for cracks and other defects while suspended above the trench immediately prior to installation in final position. Spigot ends shall be examined with particular care. Defective pipe or fittings shall be laid aside as previously specified.

Precautions shall be taken to prevent foreign material from entering the pipe while it is being placed in the line. If the pipe laying crew cannot put the pipe into the trench and in



place without getting earthen material into it, the County may require that prior to lowering the pipe into the trench, a heavy tightly woven canvas bag of suitable size be placed over each end and left there until the connection is to be made to the adjacent pipe. During pipe laying operations no debris, tools, clothing or other materials shall be placed within the barrel of the pipe.

As each length of pipe is placed in the trench the spigot end shall be centered accurately in the bell and the pipe forced home and brought to correct line and grade. Precautions shall be taken to prevent dirt from entering the annular joint space.

At times when pipe laying is not in progress the open ends of pipe shall be closed by a water-tight plug or other means approved by the County. If ground water rises in the trench, such a seal shall remain in place until the trench is pumped completely dry, ready for continued pipe laying operations.

The cutting of pipe for the insertion of valves, fittings, or closure pieces shall be done in a neat and workmanlike manner without damage to the pipe or lining so as to leave a smooth end cut at right angles to the main axis of the pipe.

Pipe shall be laid with bell ends facing in the direction of laying unless directed otherwise by the County. Where pipe is laid on a grade of ten percent (10%) or greater, the laying shall start at the bottom and shall proceed upwards with the bell ends of the pipes upgrade.

Six-inch (6") wide magnetic locating tape shall be placed in the pressure pipe trench two feet (2') above the pressure pipe throughout the length of the installation. The tape color shall be red for sanitary sewer and blue for water.

Ductile cast iron pressure sewer line shall be wrapped with red Polyethylene encasement prior to installation.

## 2.3*DEFLECTION OF DUCTILE IRON PIPE

Whenever the construction drawings require the deflection of mechanical joint or push-on joint pipe in order to form a long radius curve the amount of the deflection shall not exceed the maximum limits specified in Table 1, Mechanical Joint Pipe, and Table 2, Push-on Joint Pipe, contained in AWWA C600.

## 2.4*REINFORCED CONCRETE PRESSURE PIPE

The bottom of the excavated trench shall be checked for alignment and grade with a "grade square." The "grade square" shall also be used to measure the amount of joint offset for grade and line changes when pipe is deflected after joining two (2) sections of the material.

Both the steel hub and spigot ends of the pipe shall be thoroughly cleaned of all dirt, dust and foreign matter. The Contractor shall use rags, a wire brush, emery cloth, or a file to clean and smooth the metal parts of the joint assembly.

Lubricating compound shall be of the type recommended by the pipe manufacturer. The compound shall be maintained at a workable consistency even during cold weather. The rubber gasket shall be greased by immersing them in a pail of the lubricating compound.

At such time as the pipe is lowered half-way into the trench, the spigot ring should be lubricated. Care should be taken to lubricate the complete depth of the gasket groove. A lubricated gasket shall then be stretched around the spigot end of the pipe and seated in the gasket groove. The gasket and the inside of the steel bell ring shall be covered thoroughly with lubricating compound.

The section of the pipe shall be lowered in a horizontal manner exactly on alignment opposite the hub end of the pipe in place. The spigot end of the pipe shall be guided into the bell end of the pipe and in such a manner that dirt does not touch the lubricated spigot ring.

Joint stoppers five-eighths of an inch (5/8") thick shall be inserted into the joint on opposite sides of the inside of the pipe, for pipe diameters in excess of twenty inches (20"). The placement of the gaskets shall be checked with a feeler gauge. The joint shall be taken apart and the gasket checked for imperfections, if irregularities are noted with this gauge. If necessary the gasket will be replaced. If the gauge indicates no irregularity, the joint stopper shall be removed and the pipe shoved home with construction equipment or pull jacks.

An external feeler gauge will be used to check the gasket from the outside for sixteen-inch (16"), eighteen-inch (18") and twenty-inch (20") diameter pipe. The pipe must be removed and the gasket inspected as outlined above if any irregularity is noted.

A joint deflection shall be made between the two (2) sections of the pipe after they have been joined and checked in the manner described if such a deflection is required by construction drawings. The joint shall be cracked no more than the amount specified. The alignment of the pipe shall then be checked with an alignment square.

After two (2) additional sections of pipe are laid, the joints shall be completed with mortar. The outside of the joints shall be contained with a fabric diaper edged with wires or metal straps. Portland Cement grout shall be poured between the diaper and the sides of the pipe so that it fills the joint equally on both sides. The inside joints of pipe sizes twenty-four inches (24") and larger in diameter shall be plastered with a mortar mix of one (1) part cement to one (1) part sand. The void of the joint shall be filled completely and troweled smooth.

**2.5*PIPELINE FITTINGS**

Pipeline fittings, plugs and caps, of the required size and type shall be furnished and installed at the locations shown on the construction drawings or as directed by the County. It shall be the responsibility of the Contractor to furnish and install all proper size fittings for both horizontal and vertical deflections which are required to construct the pressure main to the line and grade shown on the construction drawings or as established in the field by the County. The fittings, plugs, and caps shall be set and joined to the pipe in the manner heretofore specified for installation.

**2.6*TESTING**

The Contractor shall subject the completed pressure pipeline to a leakage test. The test shall be performed on all newly laid pipes in lengths not to exceed two thousand feet (2,000'). The length of the test section shall exceed the specified maximum only with explicit approval of the County. The test may be conducted after the trench has been backfilled but must be completed before replacement of pavements and final restoration. All testing shall be done in the presence of the County.

**2.7*FLUSHING AND CLEANING**

The completed pipeline shall be flushed with clean water until all dirt has been washed free. Sufficient pressure and volume of water shall be furnished by the Contractor to insure that a thorough cleaning job has been accomplished.

**2.8*LEAKAGE TEST**

The Contractor shall furnish the pump, pipe connection, temporary testing plugs and caps and all necessary apparatus including pressure gauges, meters, and a supply of approved water. The Contractor shall make all necessary taps into the pressure pipelines. The Contractor shall be responsible for all labor and equipment necessary to conduct the tests, including excavating and backfilling the test pit at the location selected by the County.

The completed pipeline shall be slowly filled with water. All air shall be expelled from the pipe at high points by means of test plugs in valve bonnets, fire hydrants or through corporation stops installed by the Contractor for this purposes. After all air has been expelled, the opening shall be closed and the test pressure applied by means of a test pump connected to the pipe in a manner satisfactory to the County.

Test pressure for the leakage test shall be one hundred fifty pounds (150 lbs.) per square inch (psi) unless otherwise approved. The duration of each leakage test shall be two (2) hours.

The exposed piping and/or surface of the backfilled trench shall be carefully inspected during the test for any signs of leakage. Any cracked or defective pipe, fittings, valves, hydrants, etc. discovered in consequence of the leakage tests shall be removed and replaced by the Contractor with sound material and the test repeated until satisfactory results are obtained. The Contractor is responsible for the location, excavation and backfilling of a pressure pipeline trench at no cost to the County in addition to replacing the defective material if the leakage test is conducted on a backfilled pressure pipeline. The Contractor shall maintain the specified hydrostatic pressure at all times during the leakage test through his test pump.

Leakage shall be defined as the quantity of water that must be supplied into the newly laid pipe or any valve section thereof, to maintain the specified leakage test pressure after the air has been expelled, the pipe has been filled with water and the pressure initially applied. No pipe installation will be accepted if the amount of leakage is greater than that specified in Table 3, Allowable Leakage, AWWA C600.

# ALLOWABLE LEAKAGE PER 1000 FT. (305 m) OF PIPELINE * - GPH **

| Average Test Pressure psi (Bar) | Nominal Pipe Diameter - Inches | | | | | | | | | | | | | | | |
|---|---|---|---|---|---|---|---|---|---|---|---|---|---|---|---|---|
| | 3 | 4 | 6 | 8 | 10 | 12 | 14 | 16 | 18 | 20 | 24 | 30 | 36 | 42 | 48 | 54 |
| 450 (31) | 0.48 | 0.64 | 0.95 | 1.27 | 1.59 | 1.91 | 2.23 | 2.55 | 2.87 | 3.18 | 3.82 | 4.78 | 5.73 | 6.69 | 7.64 | 8.60 |
| 400 (28) | 0.45 | 0.60 | 0.90 | 1.20 | 1.50 | 1.80 | 2.10 | 2.40 | 2.70 | 3.00 | 3.60 | 4.50 | 5.41 | 6.31 | 7.21 | 8.11 |
| 350 (24) | 0.42 | 0.56 | 0.84 | 1.12 | 1.40 | 1.69 | 1.97 | 2.25 | 2.53 | 2.81 | 3.37 | 4.21 | 5.06 | 5.90 | 6.74 | 7.58 |
| 300 (21) | 0.39 | 0.52 | 0.78 | 1.04 | 1.30 | 1.56 | 1.82 | 2.08 | 2.34 | 2.60 | 3.12 | 3.90 | 4.68 | 5.46 | 6.24 | 7.02 |
| 275 (19) | 0.37 | 0.50 | 0.75 | 1.00 | 1.24 | 1.49 | 1.74 | 1.99 | 2.24 | 2.49 | 2.99 | 3.73 | 4.48 | 5.23 | 5.98 | 6.72 |
| 250 (17) | 0.36 | 0.47 | 0.71 | 0.95 | 1.19 | 1.42 | 1.66 | 1.90 | 2.14 | 2.37 | 2.85 | 3.56 | 4.27 | 4.99 | 5.70 | 6.41 |
| 225 (16) | 0.34 | 0.45 | 0.68 | 0.90 | 1.13 | 1.35 | 1.58 | 1.80 | 2.03 | 2.25 | 2.70 | 3.38 | 4.05 | 4.73 | 5.41 | 6.03 |
| 200 (14) | 0.32 | 0.43 | 0.64 | 0.85 | 1.06 | 1.28 | 1.48 | 1.70 | 1.91 | 2.12 | 2.55 | 3.19 | 3.82 | 4.46 | 5.09 | 5.73 |
| 175 (12) | 0.30 | 0.40 | 0.59 | 0.80 | 0.99 | 1.19 | 1.39 | 1.59 | 1.79 | 1.98 | 2.38 | 2.98 | 3.58 | 4.17 | 4.77 | 5.36 |
| 150 (10) | 0.28 | 0.37 | 0.55 | 0.74 | 0.92 | 1.10 | 1.29 | 1.47 | 1.66 | 1.84 | 2.21 | 2.76 | 3.31 | 3.86 | 4.41 | 4.97 |
| 125 (9) | 0.25 | 0.34 | 0.50 | 0.67 | 0.84 | 1.01 | 1.18 | 1.34 | 1.51 | 1.68 | 2.01 | 2.52 | 3.02 | 3.53 | 4.03 | 4.53 |
| 100 (7) | 0.23 | 0.30 | 0.45 | 0.60 | 0.75 | 0.90 | 1.05 | 1.20 | 1.35 | 1.50 | 1.80 | 2.25 | 2.70 | 3.15 | 3.60 | 4.05 |

*If the pipeline under test contains sections of various diameters, the allowable leakage will be the sum of the computed leakage for each size.

**To obtain leakage in litres/hour, multiply the values in the table by 3.785

## 2.9*BACKFILLING

The construction drawings indicate trenches, which shall be completely backfilled with gravel. In these cases, the excavated material from the trench shall be disposed of directly from the equipment excavating the trench into appropriate type carriers for removal from the construction site. Where gravel trench backfill is indicated on the construction drawings, all of the material used to backfill the trench, including the pipe bedding, the initial backfill and the balance of the backfill shall be of the gravel type material.

## 2.10*BEDDING

All trenches shall be backfilled by hand from the bottom of the trench to the centerline of the pipe with material placed in three-inch (3”) layers and compacted by tamping in a manner which shall not disturb the alignment of the pipe or fittings. If gravel backfill is not specified, the bedding shall be constructed of selected excavated materials free from stones, refuse or organic material. Each individual length of pipe shall be bedded after installation and prior to the connection thereto of an additional length of pipe.

## 2.11*INITIAL BACKFILL

The trench shall be backfilled by hand or approved mechanical methods from the centerline of the pipe to a height of one foot (1’) above the top of the pipe. The materials used shall be the equal of those specified for bedding. The Contractor shall use special care in placing this portion of the backfill so as to avoid injuring or displacing the pipeline. Mechanized equipment such as bulldozers, front end loaders, etc., shall under no conditions be used to push excavated material directly into the open trench as backfill between the bottom of the trench and a point one foot (1’) above the top of the pipe.

## GREENE COUNTY OFFICE OF SANITARY ENGINEERING
## Allowable Leakage in Water Mains
## (for 18-foot nominal lengths)
## Gallons per Minute
## Length of Pipe in Feet

| **Pipe Size** | 100 | 200 | 300 | 400 | 500 | 600 | 700 | 800 | 900 | 1000 |
|---|---|---|---|---|---|---|---|---|---|---|
| 4” | .0006 | .0012 | .0018 | .0025 | .0031 | .0037 | .0043 | .0049 | .0055 | .0061 |
| 6” | .0009 | .0018 | .0028 | .0037 | .0046 | .0055 | .0064 | .0074 | .0083 | .0092 |
| 8” | .0012 | .0025 | .0037 | .0049 | .0061 | .0074 | .0086 | .0098 | .0110 | .0123 |
| 10” | .0015 | .0031 | .0046 | .0061 | .0077 | .0092 | .0107 | .0123 | .0138 | .0153 |
| 12” | .0018 | .0037 | .0055 | .0074 | .0092 | .0110 | .0129 | .0147 | .0166 | .0184 |
| 16” | .0025 | .0049 | .0074 | .0098 | .0123 | .0147 | .0172 | .0196 | .0221 | .0245 |
| 20” | .0031 | .0061 | .0092 | .0123 | .0153 | .0184 | .0215 | .0245 | .0276 | .0306 |
| 24” | .0037 | .0074 | .0110 | .0147 | .0184 | .0221 | .0257 | .0294 | .0331 | .0368 |
| 30” | .0046 | .0092 | .0138 | .0184 | .0230 | .0276 | .0322 | .0368 | .0414 | .0460 |

## GREENE COUNTY OFFICE OF SANITARY ENGINEERING
## Allowable Leakage in Water Mains
## (for 5.49 meters nominal lengths)
## Milliliters per Minute
## Length of Pipe in Meters

| **Pipe Size cm** | 30.48 | 60.96 | 91.44 | 121.92 | 152.40 | 182.88 | 213.36 | 243.84 | 274.32 | 304.80 |
|---|---|---|---|---|---|---|---|---|---|---|
| 10.16 | 2.3 | 4.7 | 7.0 | 9.4 | 11.7 | 14.0 | 16.4 | 18.7 | 21.0 | 23.4 |
| 15.24 | 3.5 | 7.0 | 10.5 | 14.0 | 17.5 | 21.0 | 24.6 | 28.1 | 31.6 | 35.1 |
| 20.32 | 4.7 | 9.4 | 14.0 | 18.7 | 23.4 | 28.1 | 32.7 | 37.4 | 42.1 | 46.8 |
| 25.40 | 5.8 | 11.7 | 17.5 | 23.4 | 29.2 | 35.1 | 40.9 | 46.8 | 52.6 | 58.5 |
| 30.48 | 7.0 | 14.0 | 21.0 | 28.1 | 35.1 | 42.1 | 49.1 | 56.1 | 63.1 | 70.1 |
| 40.64 | 9.4 | 18.7 | 28.1 | 37.4 | 46.8 | 56.1 | 65.5 | 74.8 | 84.2 | 93.5 |
| 50.80 | 11.7 | 23.4 | 35.1 | 46.8 | 58.5 | 70.1 | 81.8 | 93.5 | 105.2 | 116.9 |
| 60.96 | 14.0 | 28.1 | 42.1 | 56.1 | 70.1 | 84.2 | 98.2 | 112.2 | 126.3 | 140.3 |
| 76.20 | 17.5 | 35.1 | 52.6 | 70.1 | 87.7 | 105.2 | 122.8 | 140.3 | 157.8 | 175.4 |

## 2.12*BALANCE OF BACKFILL

Where gravel trench backfill is specified, the backfill material from one foot (1') above the pipe to the street or shoulder grade (or subgrade of pavement) shall consist of gravel that shall be puddled with hose and pipe nozzle after the trench is backfilled. The Contractor shall furnish the necessary tank trucks, water pumps and all equipment required to settle the gravel backfill by the puddling methods.

Where backfill with excavated materials is indicated on the construction drawings, the Contractor may backfill the trench from one foot (1') above the top of the pipe to the top of the trench with excavated material provided that such material consist of loam, clay, sand, gravel or other materials that, in the opinion of the County, are suitable for backfilling. Care shall be taken to carry the backfill up evenly in the trench. Backfill shall be neatly rounded over the top of the trench to a sufficient height to allow for settlement to grade after consolidation.

## 2.13*INSTALLING GATE VALVES

Gate valves shall be installed of the size and at the location as shown on the construction drawings. Vertical valves shall be set plumb and horizontal valves installed so that the valve body is level. The valves shall be set to the new pipe in the manner specified for cleaning, laying, and jointing pipe. Mechanical joint valves shall be used for buried pipelines. Other types of joints for pipelines within structures will be shown on the construction drawings. Valves shall be located so as not to fall within the ditch lines.

## 2.14*INSTALLING BUTTERFLY VALVES

Butterfly valves for buried service shall be installed of the size and at the locations shown on the construction drawings. The valve shaft shall be in the horizontal position with a completely enclosed manual nut operator for buried service. Butterfly valves can be installed with spigot ends shouldered for victaulic couplings, with bell ends for push-on type joints or with mechanical joint bells. The valve assembly shall be in accordance with the requirements shown on the drawings, "Butterfly Valves for Direct Burial," included in these specifications for the particular type of valve ends furnished. Cast iron pipe, cast iron pipe nipples, and cast iron reducing fittings shall be furnished, shouldered to receive victaulic couplings to complete the butterfly valve assemblies for cast iron pipe. Spigot and bell end adapters with victaulic end pipe shall be used to complete the butterfly valve assemblies for pre-stressed concrete pipe.

Butterfly installations within structures shall be installed in the manner and with the operator as shown on the construction drawings. Butterfly valves for open installation will include a position indicator.

# BUTTERFLY VALVES FOR DIRECT BURIAL

NOTE: FOR BUTTERFLY VALVES FURNISH VICTAULIC COUPLING ON EACH SIDE OF VALVE.

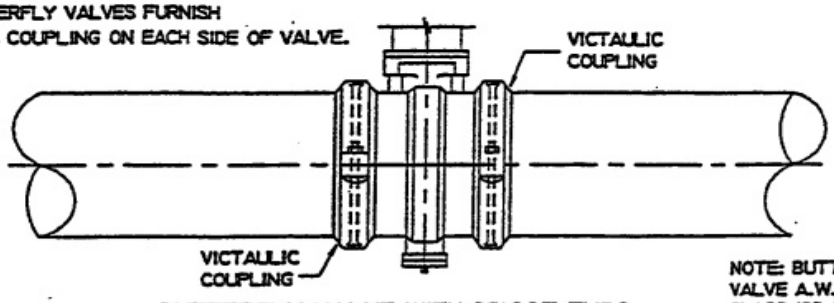


NOTE: BUTTERFLY VALVE A.W.W.A. C-504 CLASS 125-16

BUTTERFLY VALVE WITH SPIGOT ENDS SHOULDERED FOR VICTALIC COUPLING

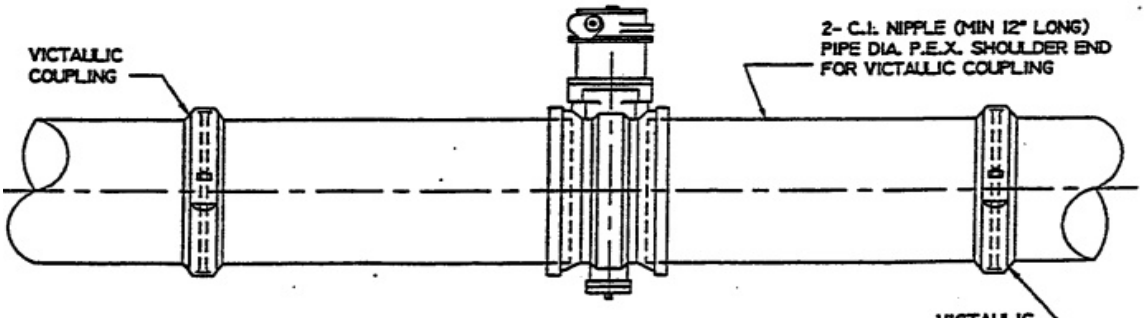


BUTTERFLY VALVE WITH BELL ENDS
" PUSH-ON TYPE " FOR VICTALIC COUPLING

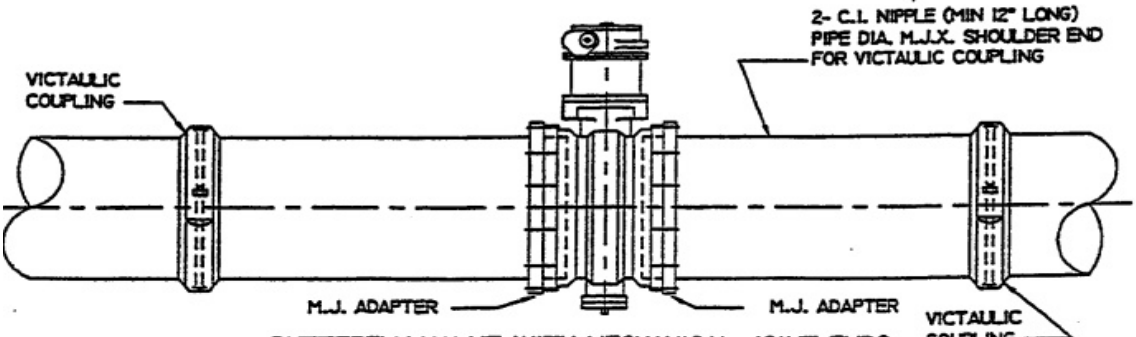


BUTTERFLY VALVE WITH MECHANICAL JOINT ENDS FOR VICTALIC COUPLING

NOTE: FOR CONCRETE PIPE "USE ADAPTERS"
1-SPIGOT END X VICTAULIC
1-BELL END X VICTAULIC

NOTE: FOR CAST IRON PIPE THE PIPE SECTION ADJACENT TO VICTAULIC COUPLING TO BE FURNISHED WITH SHOULDER END.

## 2.15*INSTALLING AIR RELEASE VALVES & AIR AND VACUUM VALVES

All installations of air release valves and air and vacuum valves shall conform to the manufacturer's recommendations and to the details indicated on the construction drawings.

## 2.16*INSTALLING FIRE HYDRANTS

### 2.16.1*GENERAL

Fire hydrants shall be set at the locations shown on the construction drawings or as directed by the County. They shall be installed in such a manner as to provide complete accessibility and also in such a manner that the possibility of damage from vehicles or injury to pedestrians will be minimized.

Minimum distance from any edge of the driveway to fire hydrant shall be five feet (5').

The hydrant barrel shall be set so that the horizontal centerline of the steamer nozzle is eighteen inches (18") above the top of the curb on streets with curb, and eighteen inches (18") above the ground in unpaved areas, unless directed otherwise by the County.

When placed behind the curb, the hydrant barrel shall be set so that the outer end of the streamer nozzle cap shall be from eighteen inches (18") to thirty inches (30") behind the face of the curb.

Should the property owner re-grade the area around the fire hydrant, the property owner shall be required to modify the fire hydrant, at his own expense, to comply with these specifications. The required modifications shall be performed under Office of Sanitary Engineering supervision.

All hydrants shall stand plumb with steamer nozzle facing the curb or street. The hydrant shall be placed on a flat stone or concrete slab six inches (6") thick and eighteen inches (18") square.

Hydrants shall be set in relation to the established grade shown on the construction drawings or as directed by the County. All hydrants on new plat sections behind the curb regardless of the depth of cover of the water supply branch, shall be furnished with the basic barrel for five feet (5') of cover over the water supply branch and the balance of the hydrant, as required, shall be made up of a standard hydrant extension. Minimum distance between fire hydrant and any other fitting is three feet (3').

The excavations around each hydrant shall be backfilled completely with coarse gravel (#57s only), free from sand, to within one foot (1') of the finished surface of the ground.

The gate valve for a fire hydrant branch shall be connected to the main line through a mechanical joint tee and anchoring piece or an anchoring tee. The fire hydrant branch assembly installation shall be as shown on the drawings, "Approved Fire Hydrant Branch Assembly Diagrams," unless the County specifically approves an alternative which must be shown on the approved construction plans.

Any variation from these guidelines must be approved by the Office of Sanitary Engineering.

## FIRE HYDRANT INSTALLATION USING ANCHORING PIECES

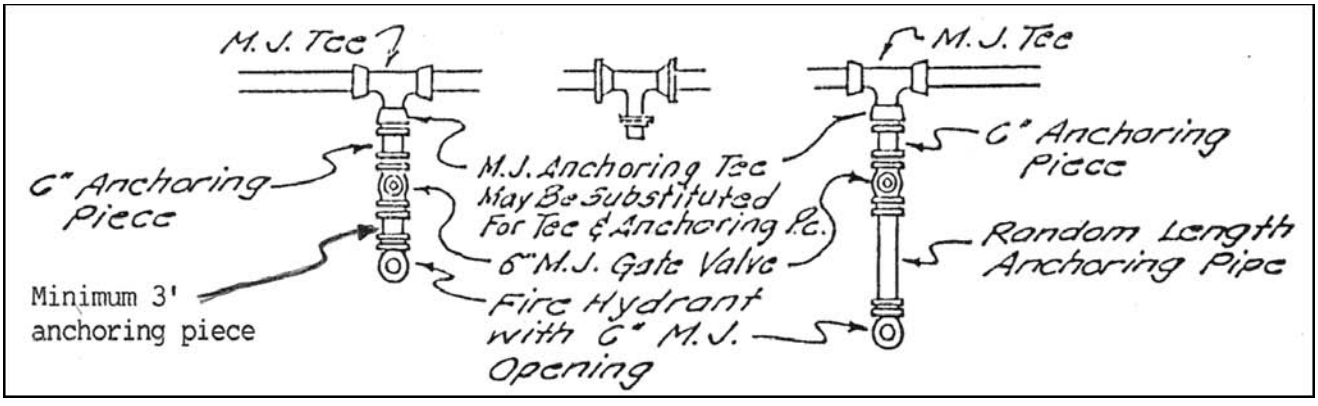


**2.16.2*ANCHORAGE**

The Contractor shall anchor all dead end valves, plugs, caps, tees and bends in excess of ten degrees (10°) by use of thrust or anchor blocking or approved restrained joints to prevent movement of any portion of the pipe due to internal pressure.

The length of pipe with restrained joints called for on the construction drawings shall be considered as a minimum for the stated test pressure and stated minimum compacted backfill over the pipe.

If the pipeline is tested at a high pressure and/or without the stated minimum compacted pipe cover, additional restrained joints will be required and shall be furnished and installed by the Contractor at no additional cost to the Owner.

**2.17*DISINFECTION**

All new water mains and repaired sections or extensions to existing water mains shall be chlorinated before being placed into service as per the current edition of AWWA C601. The procedures for disinfecting the water mains and the chemicals to be used shall be in accordance with the requirements of AWWA C601.

# Profile View-Fire Hydrant Installation

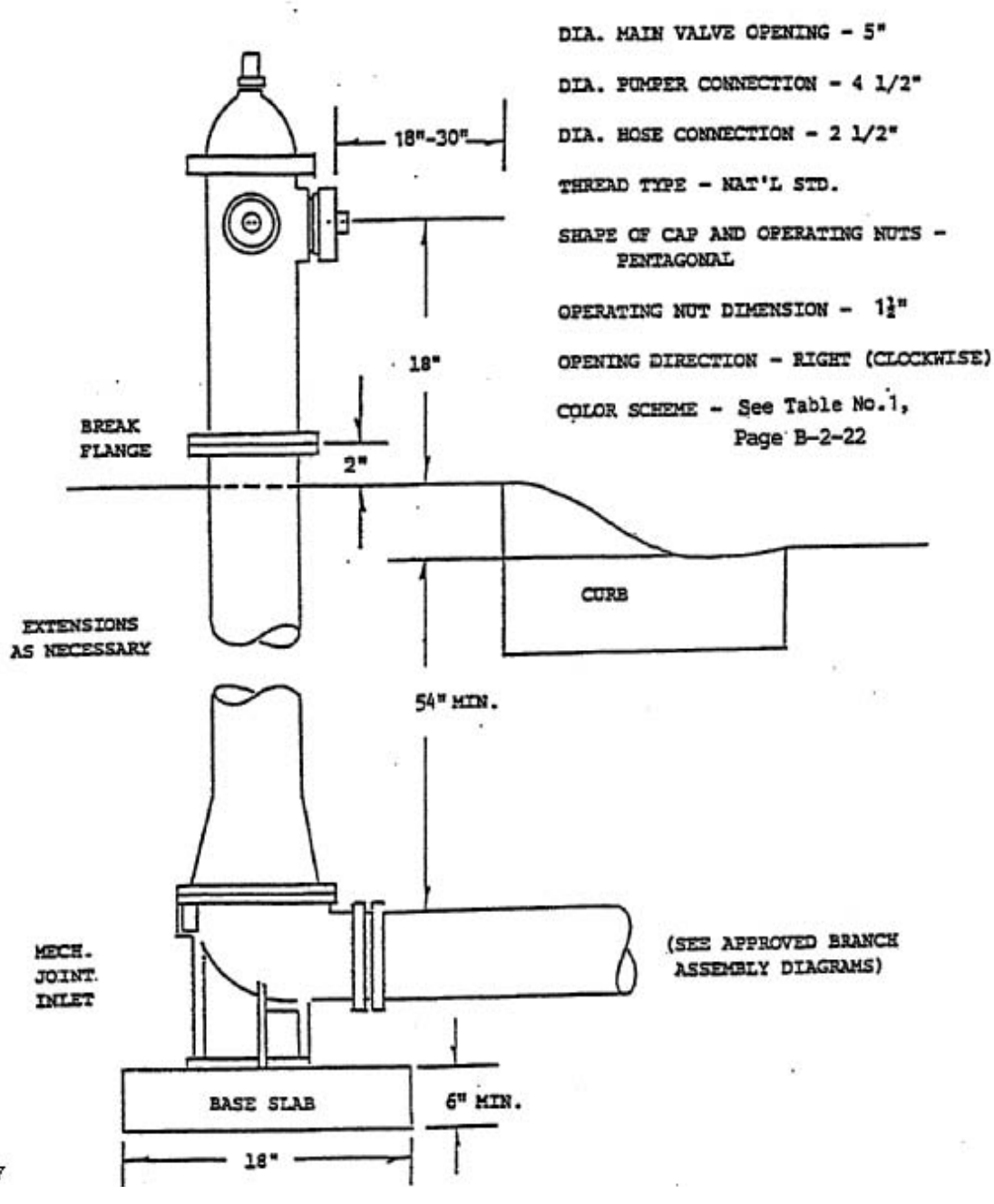


NOTE: EXCAVATION AROUND FIRE HYDRANT SHALL BE BACKFILLED COMPLETELY WITH COARSE GRAVEL (NO.57S) FREE OF SAND, TO WITHIN ONE (1) FOOT OF THE FINISHED SURFACE OF THE GROUND.

# Approved Fire Hydrant Branch Assembly Diagrams--Figure 1

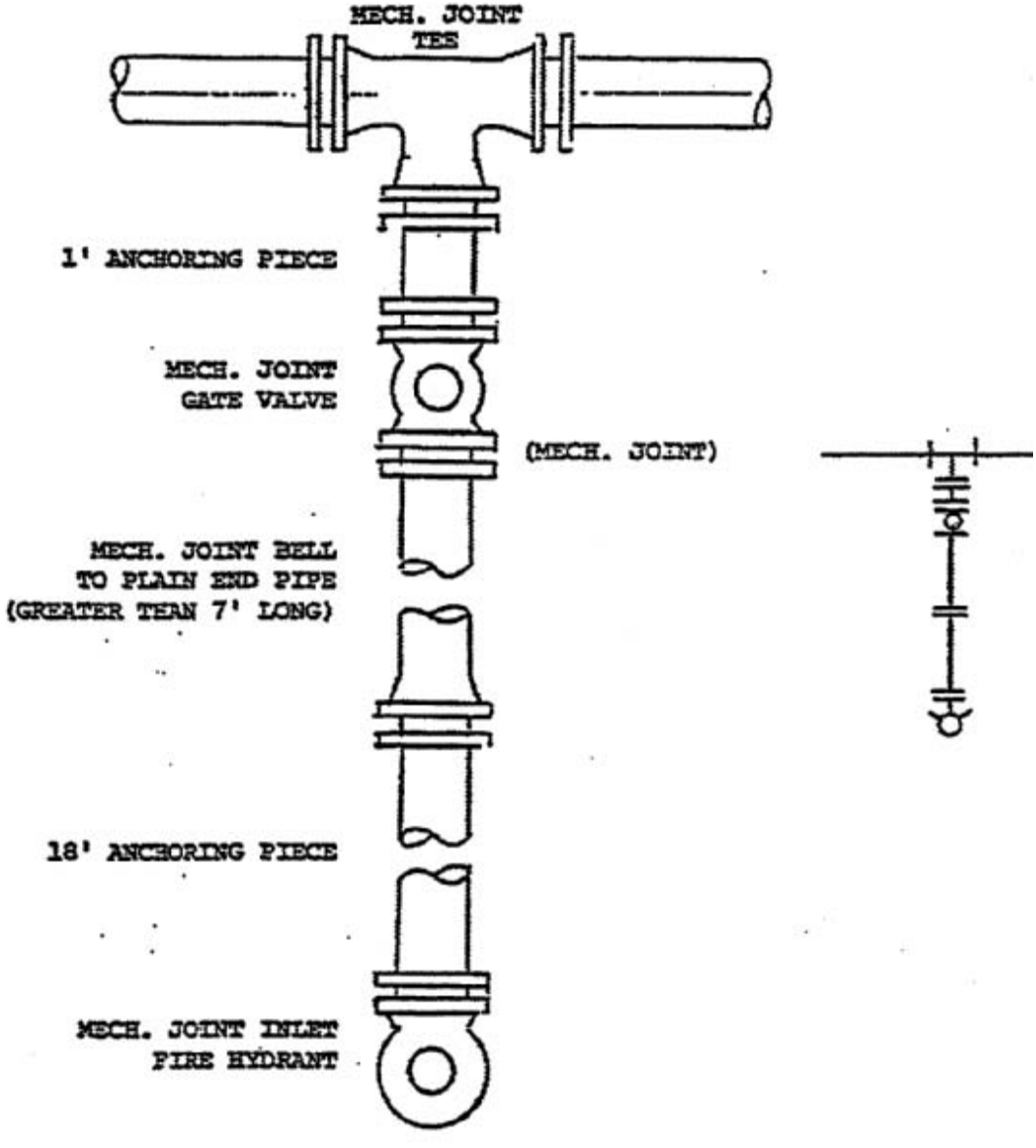

# Approved Fire Hydrant Branch Assembly Diagrams--Figure 2

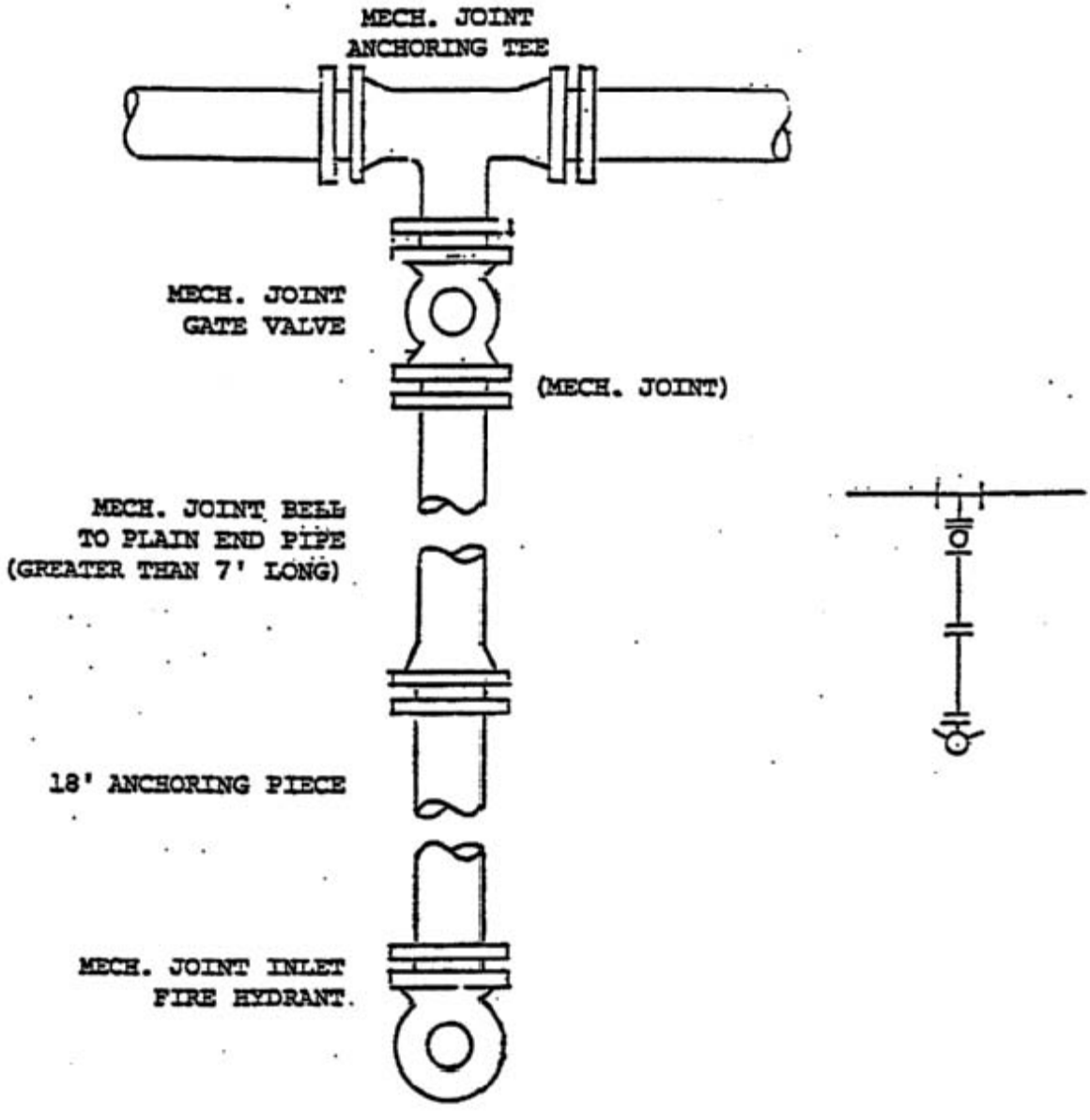

# Approved Fire Hydrant Branch Assembly Diagrams--Figures 3 and 4

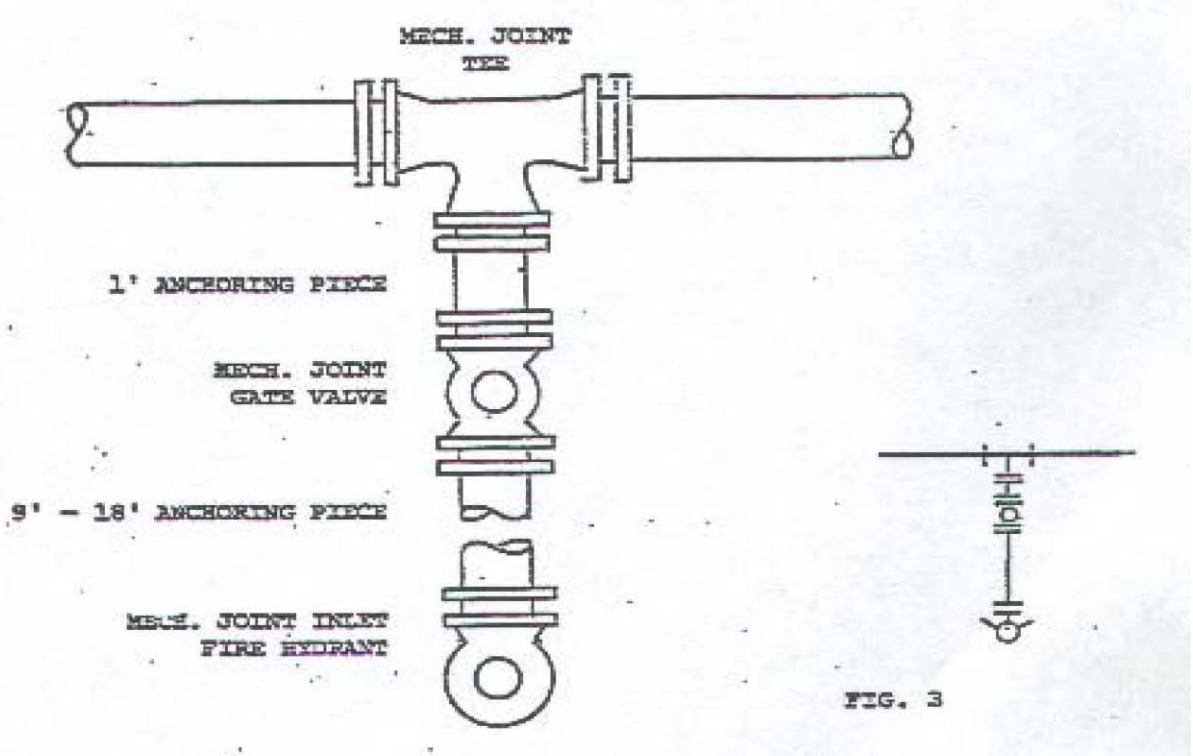


FIG. 3

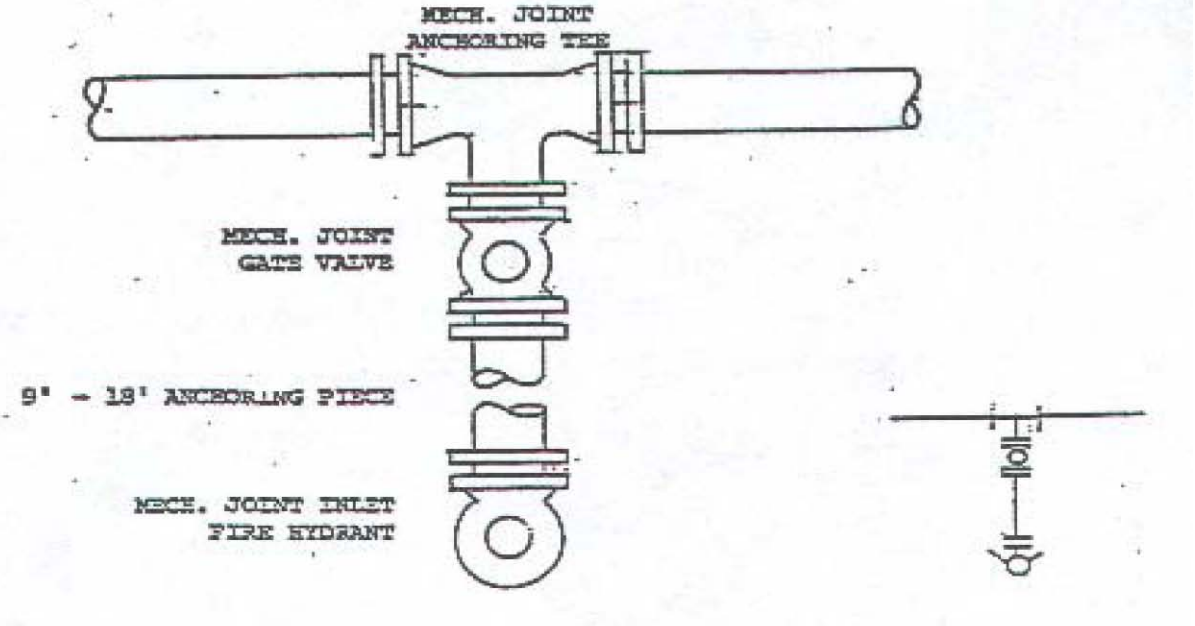


FIG. 4

# Approved Fire Hydrant Branch Assembly Diagrams--Figures 5 and 6

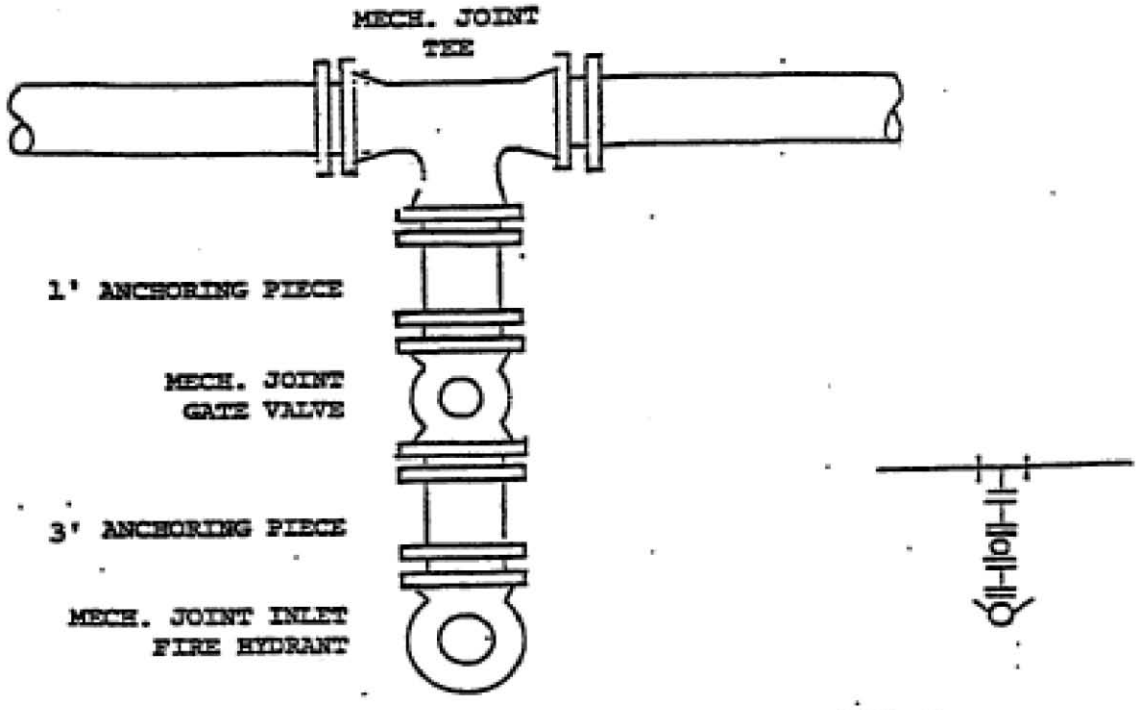


FIG. 5

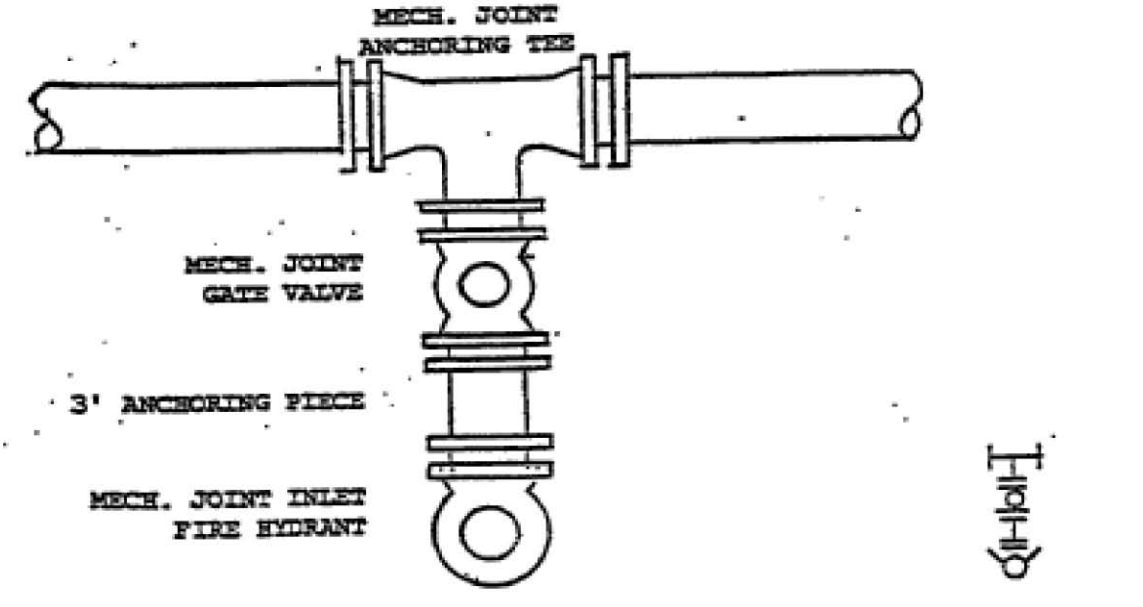


FIG. 6

# Approved Fire Hydrant Branch Assembly Diagrams--Figures 7 and 8

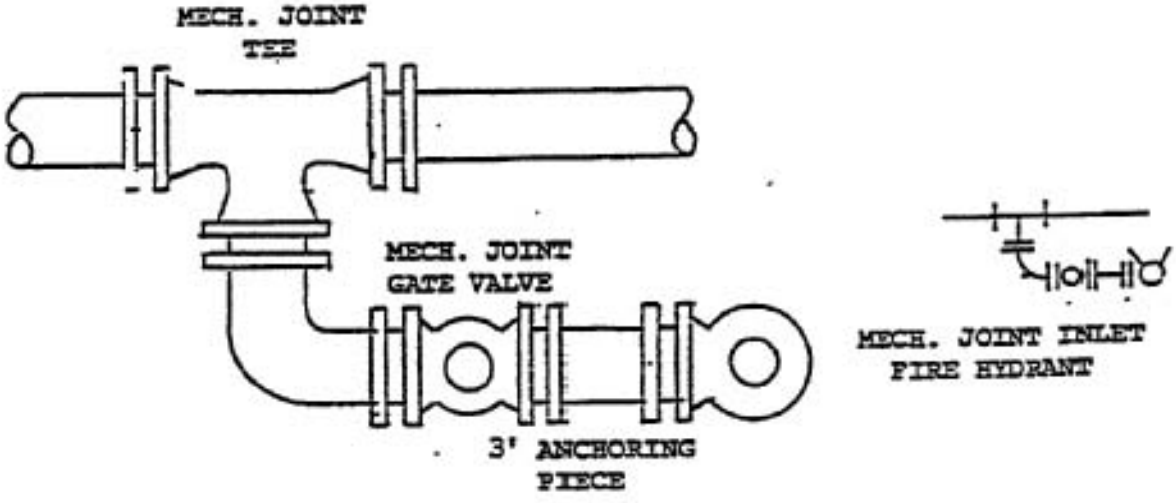


FIG. 7

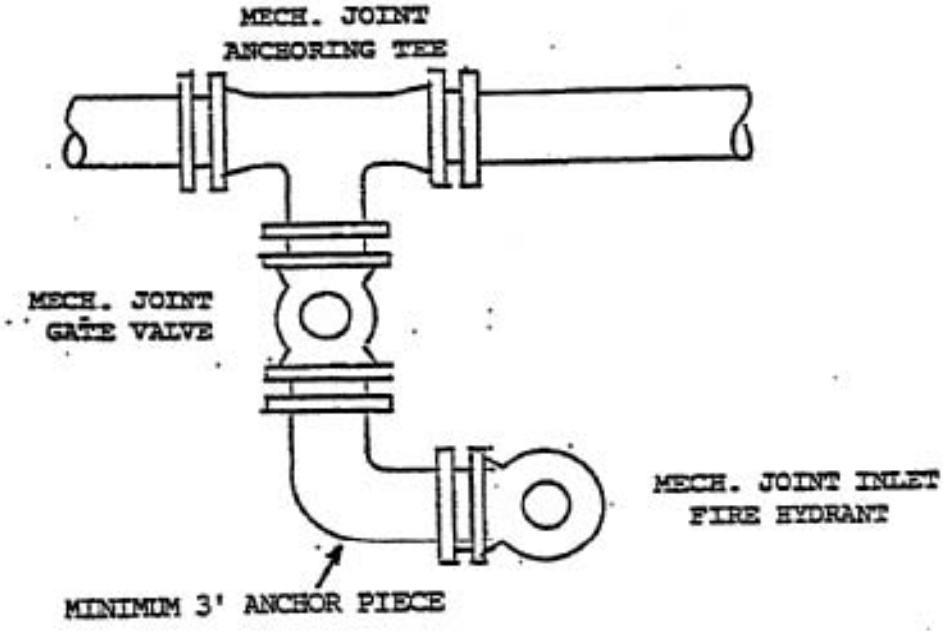


FIG. 8

# Approved Fire Hydrant Branch Assembly Diagrams--Figures 9 and 10

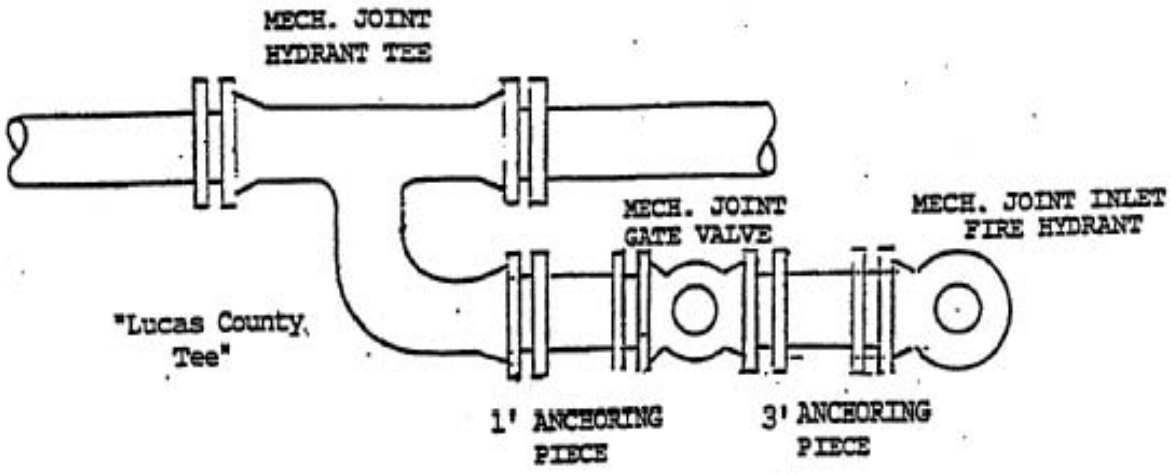


FIG. 9

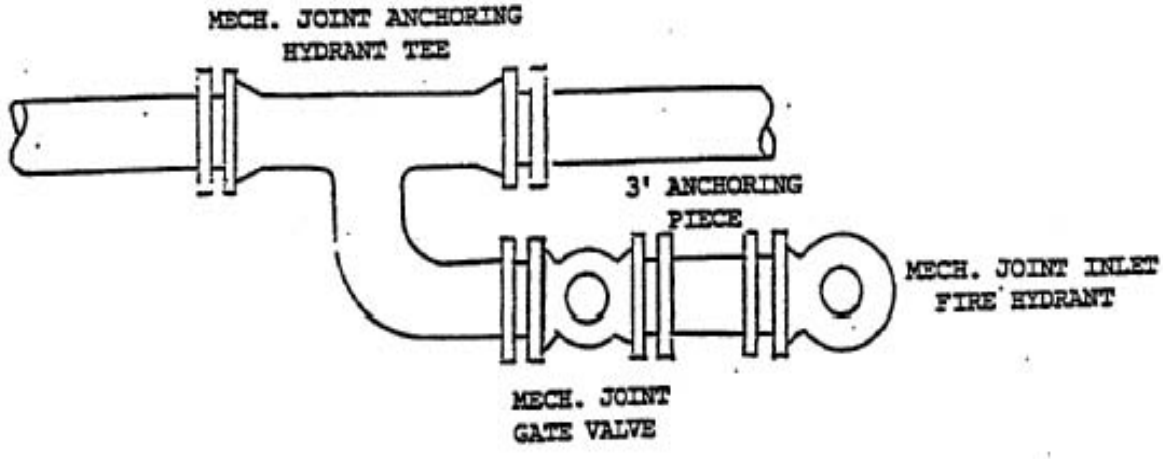


FIG. 10

## 2.18*PRESSURE SERVICE LINES (1" AND UNDER)

Installation of a water service line shall begin with a one inch (1") tap into the water main under pressure. A corporation stop shall be inserted into the tap. The water service line shall be inserted into the corporation stop and installed as one (1) continuous line to terminate at a point ten feet (10') outside the road right-of-way of the property to be served. The service line shall be terminated with a curb or service stop.

The contractor shall install a 2" x 4" wooden pole at the termination point of the water service line. The pole shall be installed in a vertical plane extending from the termination of the service line to a point forty-eight inches (48") above ground elevation. Care shall be exercised to keep the pole plumb during backfilling operations and to preserve the above ground extension during the cleanup and restoration operation. **The contractor shall stamp a "W" for water service and an "S" for sewer service in the curb at the points where the services cross perpendicular to the curb.**

The water service line shall be tested for leakage and disinfected in conjunction with the water main and fire hydrants.

## 2.19*METER PITS

When water meter pits are installed at the terminus of the water service line, the service (curb) stop shall be located inside the meter pit. All water service lines greater than one inch (1") in diameter requires an additional shut off valve located between the water main and the meter pit.

# CONCRETE THRUST BLOCK

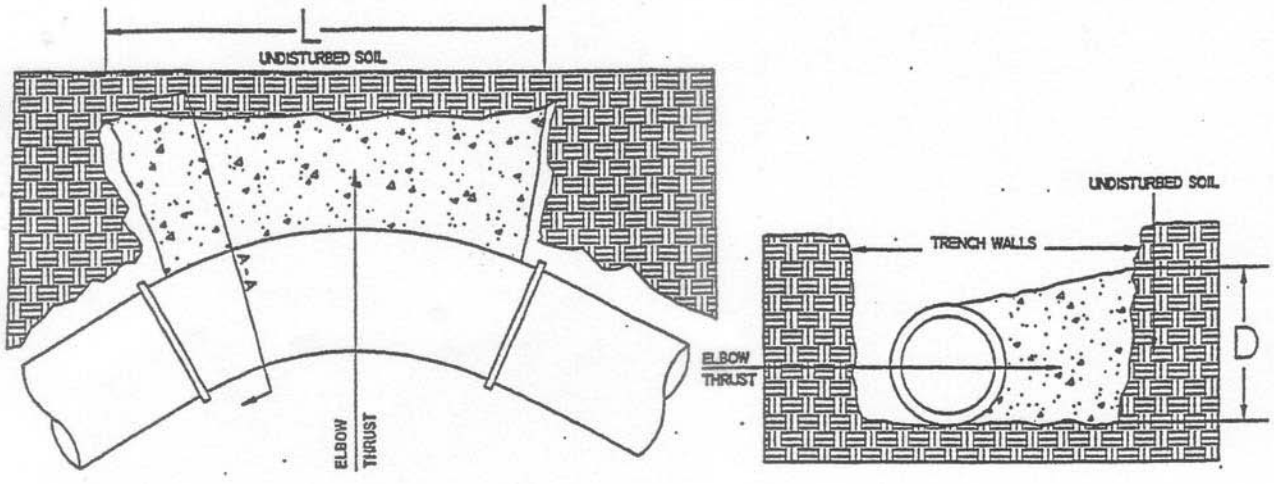


PLAN VIEW

SECTION A–A

AREA = L x D

## MIN. AREA OF ELBOW BLOCKS (sq.ft.)*

| ELBOW DEFLECTION ANGLE (DEGREES) | DIAMETER OF PIPE (INCHES). | | | | | |
|---|---|---|---|---|---|---|
| | 4 | 6 | 8 | 10 | 12 | 16 |
| 11 1/4 | 1 | 1 | 1 | 2 | 2 | 4 |
| 22 1/2 | 1 | 2 | 2 | 3 | 4 | 7 |
| 45 | 1 | 3 | 4 | 6 | 8 | 14 |
| 90 | 2 | 4 | 7 | 11 | 15 | 26 |
| TEE OR DEAD END | 2 | 3 | 5 | 8 | 11 | 18 |

* BASED ON BEARING PRESSURE OF 2000# /SQ'
(ON UNDISTRUBED SOIL)
CONCRETE BLOCKING FOR THRUST RESTRAINT

# CONCRETE ANCHOR BLOCK

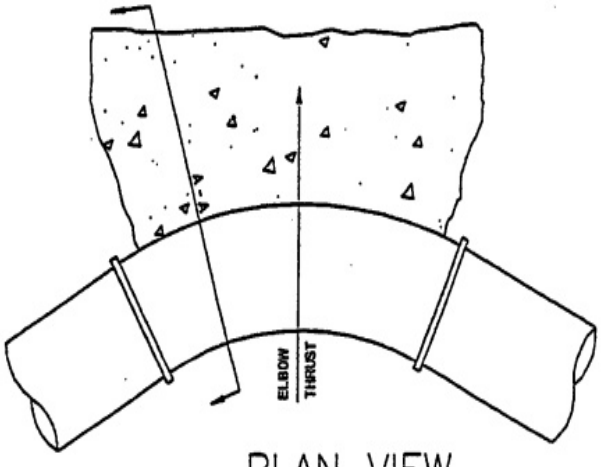


PLAN VIEW

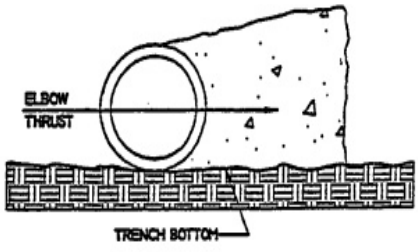


SECTION A–A

## MIN. VOLUME OF FRICTION BLOCKS (CU.YD.)

| ELBOW DEFLECTION ANGLE (DEGREES) | DIAMETER OF PIPE (INCHES) | | | | | |
|---|---|---|---|---|---|---|
| | 4 | 6 | 8 | 10 | 12 | 16 |
| 11 1/4 | 1 | 1 | 2 | 3 | 4 | 6 |
| 22 1/2 | 1 | 2 | 4 | 5 | 7 | 12 |
| 45 | 2 | 4 | 7 | 10 | 13 | 23 |
| 90 | 4 | 7 | 12 | 17 | 24 | 42 |
| TEE OR DEAD END | 3 | 5 | 9 | 13 | 18 | 32 |

* BASED ON 0.3 SOIL FRICTION

CONCRETE BLOCKING FOR THRUST RESTRAINT

# MINIMUM BEARING SURFACE AREA FOR CONCRETE THRUST BLOCKING (SQ. M.)*

| ANGLE OF DEFLECTION (0) | PIPE DIAMETER (CM) | | | | | |
|---|---|---|---|---|---|---|
| | 10.16 | 15.24 | 20.32 | 25.40 | 30.48 | 40.64 |
| 11 1/4° | .093 | .093 | .093 | .186 | .186 | .372 |
| 22 1/2° | .093 | .186 | .186 | .279 | .372 | .650 |
| 45° or Wye | .093 | .279 | .372 | .557 | .743 | 1.301 |
| 90° | .186 | .372 | .650 | 1.022 | 1.394 | 2.415 |
| Tee or Dead End | .186 | .279 | .465 | .743 | 1.022 | 1.672 |

*Based on undisturbed trench wall soil bearing capacity of 9764 kg/m2.

# MINIMUM VOLUME OF CONCRETE FOR CONCRETE ANCHOR BLOCKING (CU. M.)*

| ANGLE OF DEFLECTION (0) | PIPE DIAMETER (CM) | | | | | |
|---|---|---|---|---|---|---|
| | 10.16 | 15.24 | 20.32 | 25.40 | 30.48 | 40.64 |
| 11 1/4° | .765 | .765 | 1.529 | 2.294 | 3.058 | 4.587 |
| 22 1/2° | .765 | 1.529 | 3.058 | 3.823 | 5.352 | 9.175 |
| 45° or Wye | 1.529 | 3.058 | 5.352 | 7.646 | 9.939 | 17.585 |
| 90° | 3.058 | 5.352 | 9.175 | 12.997 | 18.349 | 32.111 |
| Tee or Dead End | 2.294 | 3.823 | 6.881 | 9.939 | 13.762 | 24.465 |

*Based on 0.3 coefficient of static friction.

# Standard Thrust and Anchor Blocking Diagrams

PLAN VIEW-BEND

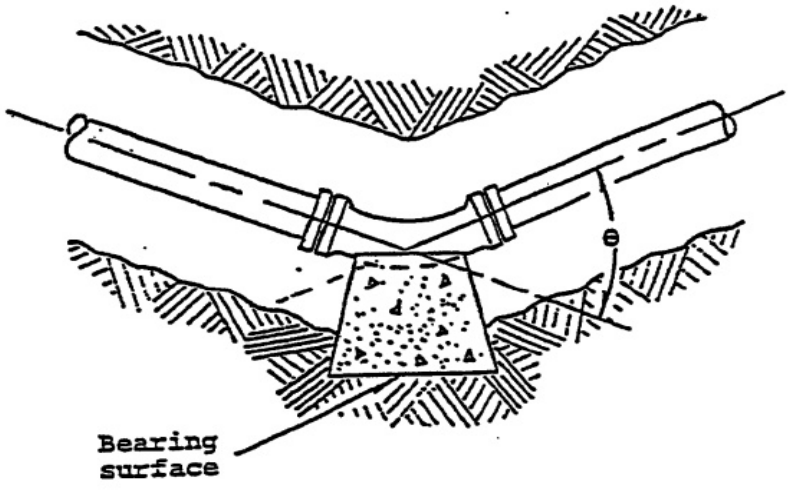


PLAN VIEW - WYE

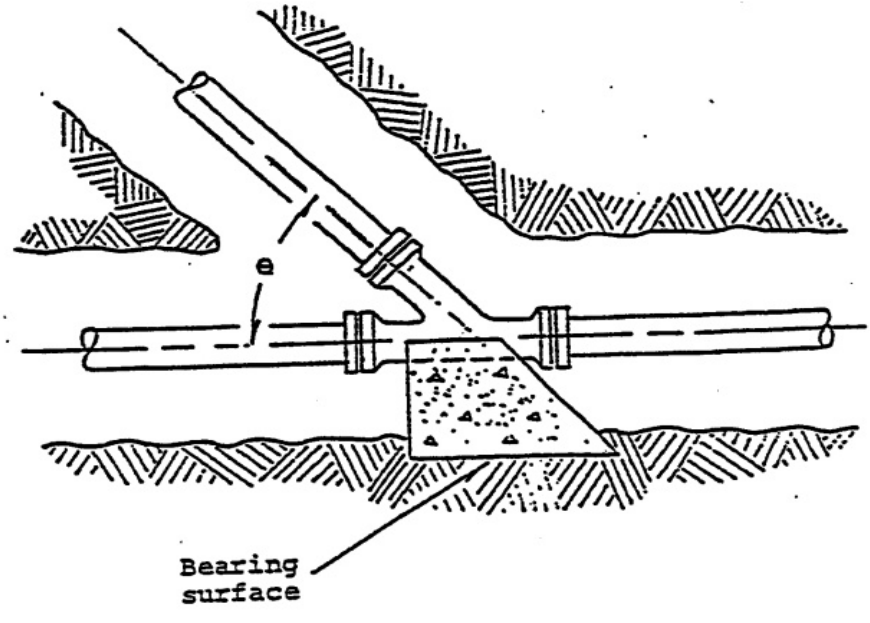

# Standard Thrust and Anchor Blocking Diagrams

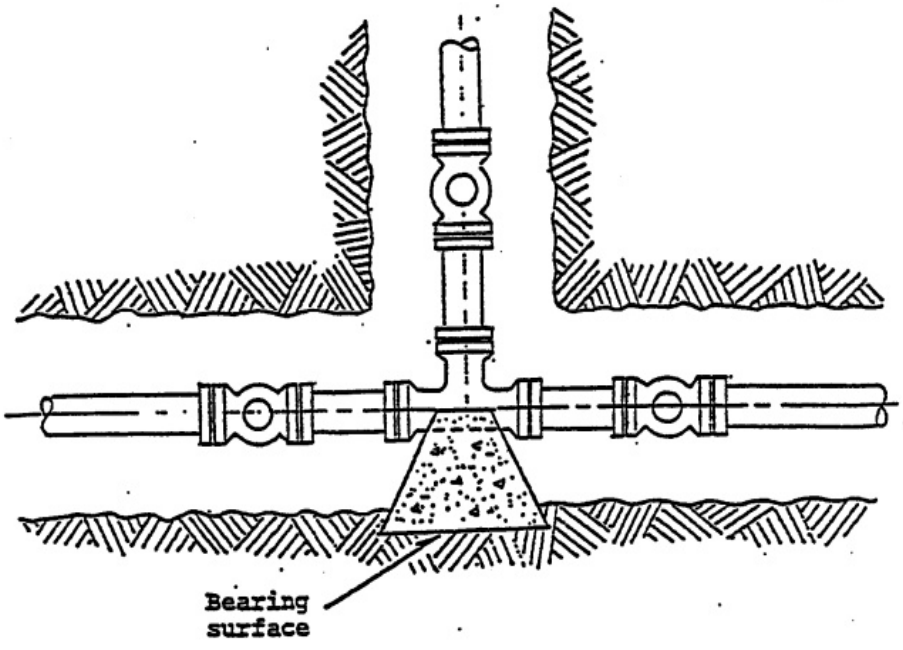


PLAN VIEW – TEE, ONE RUN PLUGGED

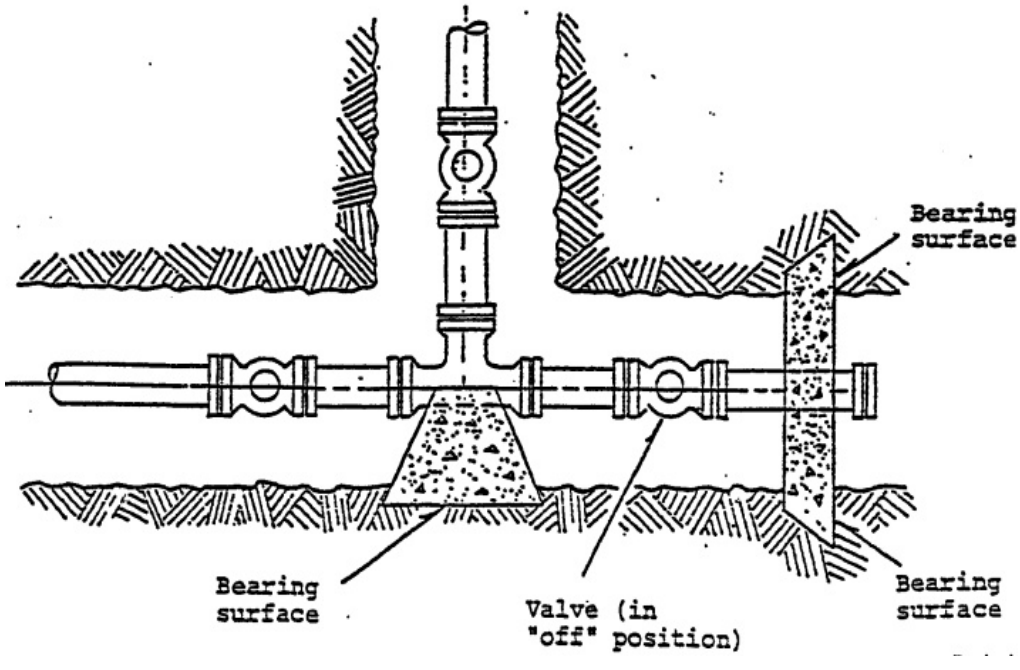

# Standard Thrust and Anchor Blocking Diagrams

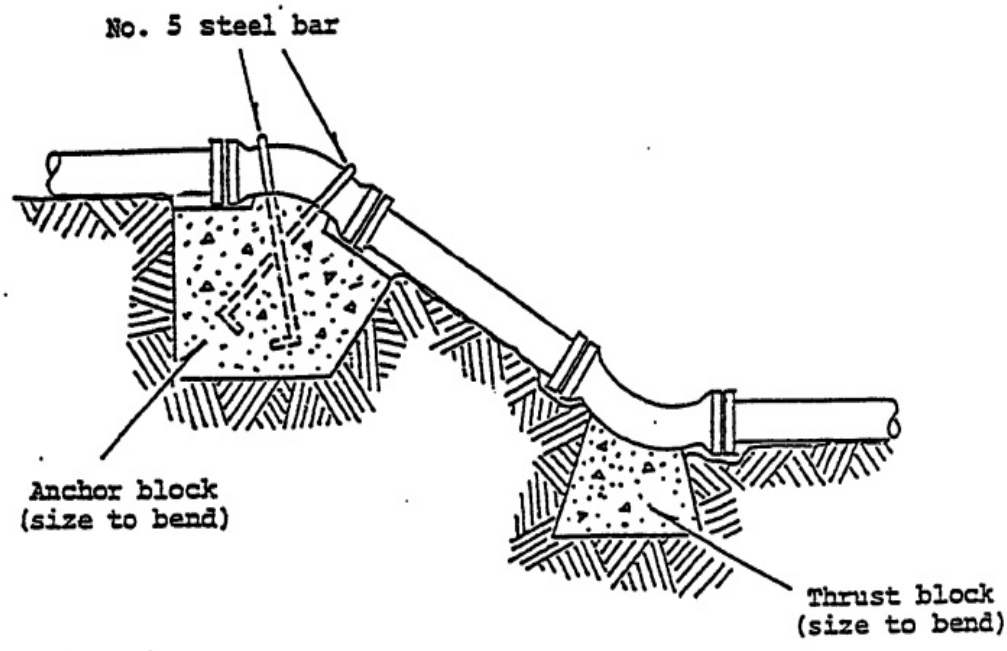


PLAN VIEW - PLUGGED ENDS

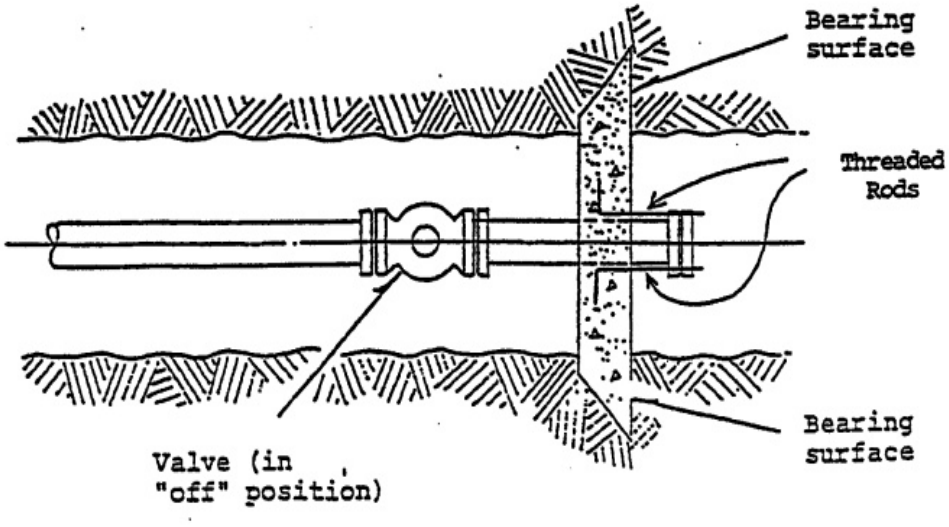

# Required Length of Restrained Joints for Water Main Installations

BENDS

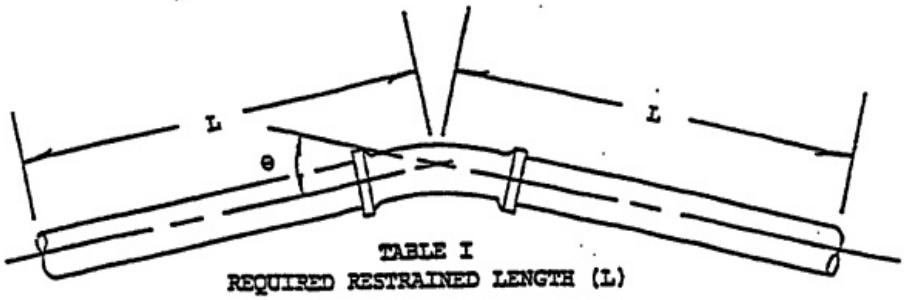


TABLE I
REQUIRED RESTRAINED LENGTH (L)

| ANGLE OF DEFLECTION (θ) | PIPE DIAMETER (IN.) 4" | 6" | 8" | 10" | 12" | 16" | 20" | 24" |
|---|---|---|---|---|---|---|---|---|
| 11 1/4° (1/32) | * | * | * | *. | * | 5' | 5' | 6' |
| 22 1/2° (1/16) | * | 2' | 3' | 5' | 6' | 8' | 10' | 12' |
| 45° (1/8) | 4' | 8' | 12' | 14' | 20' | 30' | 36' | 45' |
| 90° (1/4) | 12' | 26' | 38' | 48' | 66' | 98' | 125' | 145' |

L (ft.)

*Restrained joint required at fitting only

TEES

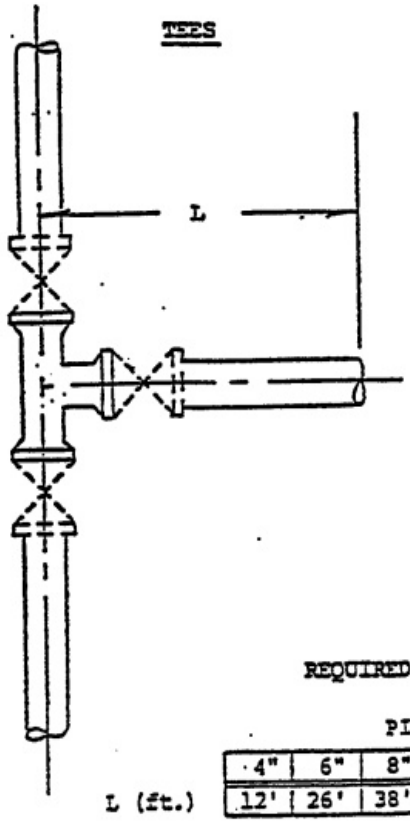


PLUGGED ENDS

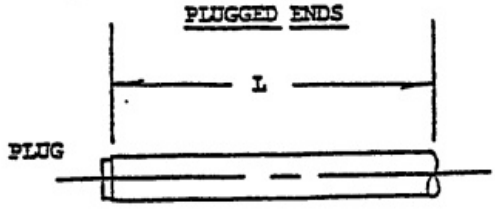


TEMPORARY FIRE HYDRANTS

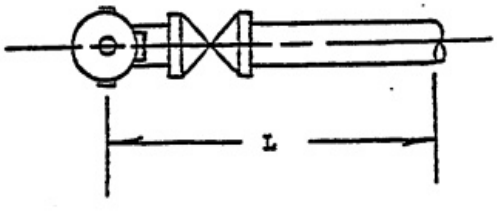


TABLE II
REQUIRED RESTRAINED LENGTH (L)

| | PIPE DIAMETER (IN.) 4" | 6" | 8" | 10" | 12" | 16" | 20" | 24" |
|---|---|---|---|---|---|---|---|---|
| L (ft.) | 12' | 26' | 38' | 48' | 66' | 98' | 125' | 145' |

# Required Length of Restrained Joints for Water Main Installations

BENDS

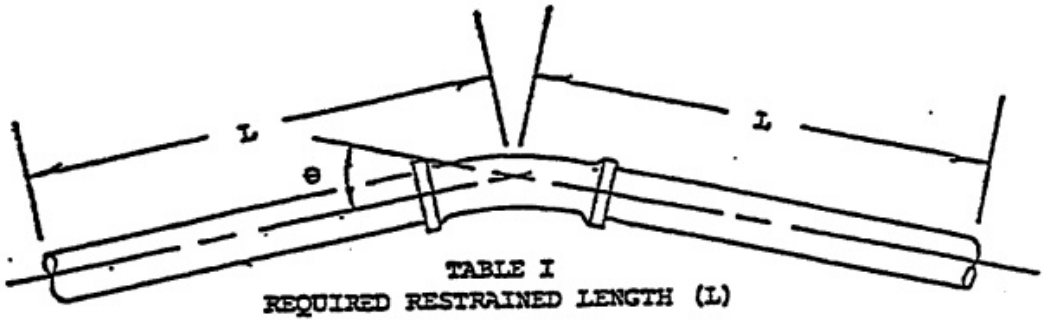


TABLE I
REQUIRED RESTRAINED LENGTH (L)

| ANGLE OF DEFLECTION (θ) | PIPE DIAMETER (cm.) 10.16 | 15.24 | 20.32 | 25.40 | 30.48 | 40.64 | 50.80 | 60.96 |
|---|---|---|---|---|---|---|---|---|
| 11 1/4° (1/32) | * | * | * | * | * | 1.524 | 1.524 | 1.829 |
| 22 1/2° (1/16) | * | .610 | .914 | 1.524 | 1.829 | 2.463 | 3.048 | 3.658 |
| 45° (1/8) | 1.219 | 2.483 | 3.658 | 4.267 | 6.096 | 9.144 | 10.973 | 13.716 |
| 90° (1/4) | 3.658 | 7.925 | 11.582 | 14.630 | 20.117 | 29.870 | 38.100 | 44.196 |

L (m.)

*Restrained joint required at fitting only

TEES

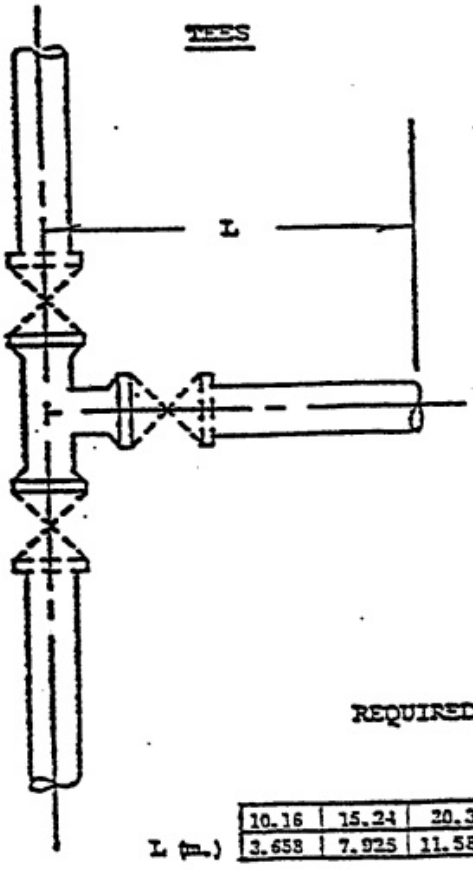


PLUGGED ENDS

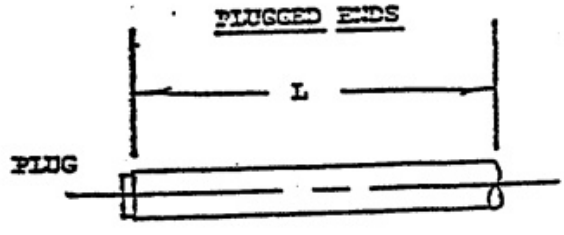


TEMPORARY FIRE HYDRANTS

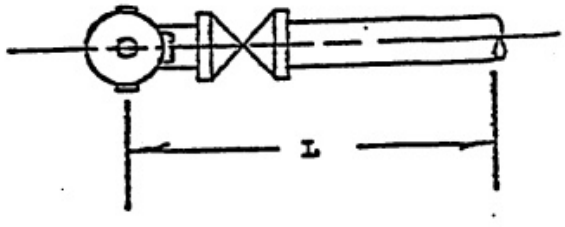


TABLE II
REQUIRED RESTRAINED LENGTH (L)

| | PIPE DIAMETER (cm.) 10.16 | 15.24 | 20.32 | 25.40 | 30.48 | 40.64 | 50.80 | 60.96 |
|---|---|---|---|---|---|---|---|---|
| L (m.) | 3.658 | 7.925 | 11.582 | 14.630 | 20.117 | 29.870 | 38.100 | 44.196 |

# Standard Installations for Water Service Connections into Water Mains

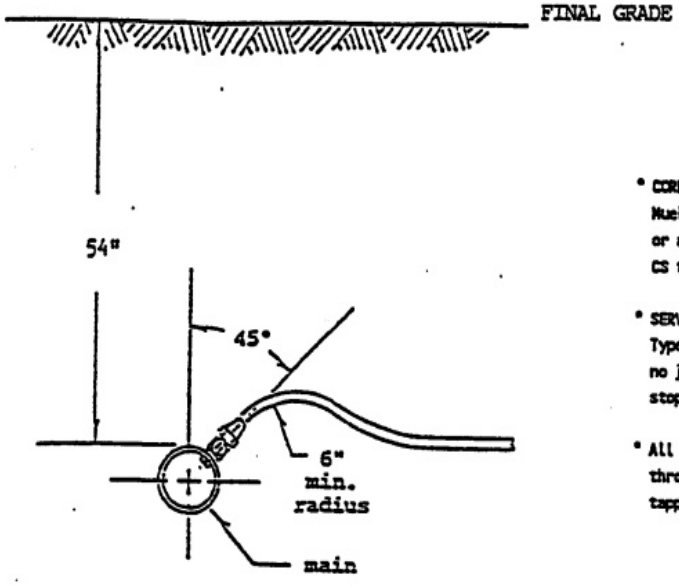


- CORPORATION STOP:
  Mueller H-15000 (1"), Ford F1000 (1"), or approved equal with A.W.W.A. CC or CS thread.
- SERVICE TYPE:
  Type "K" cooper, 1" dia. min. -- no joints permitted from corporation stop to curb stop.
- All taps through AC, PVC made through minimum of 12" long S.S. tapped repair clamps.

1 1/2"-2" WATER SERVICE CONNECTION:

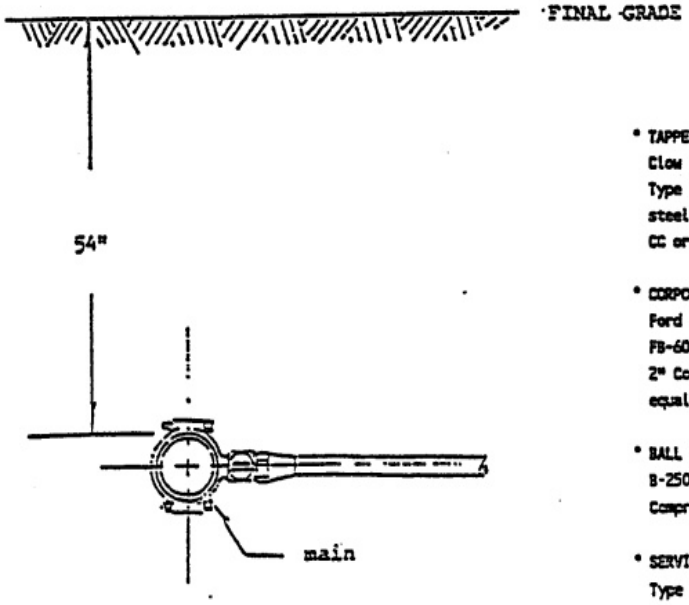


- TAPPED REPAIR CLAMP:
  Clow F-1202 or 3131, Smith-Blair Type 237, or approved equal stainless steel clamp and bolts with A.W.W.A. CC or CS threaded tap.
- CORPORATION STOP:
  Ford 1 1/2" Flare FB-600-6, 2" Flare FB-600-7, 1 1/2" Compression FB-1000-6, 2" Compression FB-1000-7, or approved equal with A.W.W.A. CC or CS thread.
- BALL VALVES:
  B-25000 Mueller Flare, B25008 Mueller Compression.
- SERVICE PIPE:
  Type "K" copper.

# SECTION 3

## 3*GRAVITY PIPELINES

### 3.1*TRENCH EXCAVATION

#### 3.1.1*GENERAL
Trenches for underground gravity pipelines shall be excavated so that the pipes and appurtenances can be installed to the alignments and grades required.

#### 3.1.2*TRENCH DEPTH
The trench shall be excavated to a minimum depth four inches (4”) below the outermost dimension of the pipe barrel or pipe bell to be installed therein.

Rock, if present in the trench bottom, shall be excavated to a minimum depth six inches (6”) below the outermost dimensions of the pipeline.

The trench for lateral service gravity pipelines shall be excavated to a minimum depth of four inches (4”) below the outermost dimension of the pipe barrel or pipe bell to be installed therein.

Rock, if present in the lateral service gravity pipeline trench bottom, shall be excavated to a minimum depth four inches (4”) below the outermost dimensions of the pipeline.

### 3.2*INSTALLING GRAVITY PIPELINES
The gravity pipelines shall be laid in a finished trench commencing at the low point with the spigot ends pointing in the direction of flow. All gravity pipes, including service laterals, shall be placed on a dry, stable bedding material shaped to receive the barrel support for the full length of the pipe, and form a straight gravity pipeline with a uniform grade true to the established line and grade. If the open end of the pipe section is low, the individual pipe must be removed and the bed prepared to the proper grade.

Line and grade for the gravity pipeline may also be established by the Contractor using laser equipment. Each manhole location shall be marked with a hub designating line. A grade stake shall be offset from each manhole location. Grade stakes shall be placed at points about twenty-five feet (25’) and one hundred twenty-five feet (125’) from each manhole and at additional intervals as required by the length and grade of the sewer span. Copies of cut sheets shall be provided for Inspectors.

Six-inch (6”) wide magnetic locating tape shall be placed in the gravity pipe trench two feet (2’) above the gravity pipe throughout the length of the installation. The tape color shall be green for sanitary sewer and blue for water.

### 3.3*BEDDING

#### 3.3.1*PIPE BEDDING
A cradle of pipe bedding shall be furnished for all gravity pipelines. The bedding material shall be thoroughly compacted by hand tamping and shall be placed in such a manner to completely support the pipeline in its entire length. There shall be a minimum of four inches (4”) of bedding between the outermost dimension of the pipe and the bottom of the excavation in areas for normal excavation. There shall be a minimum of six inches (6”) of bedding between the outermost dimension of the pipe and the bottom of the excavation in areas of rock excavation.

As soon as possible after the joint is made, the balance of the bedding material shall be placed up to the spring line of the pipe to offset conditions that might tend to move the pipe off from line or grade. Disturbing the pipe in any manner, after the joints have been made, shall not be permitted. The balance of the bedding material shall be thoroughly compacted by hand tamping.

The pipe bedding shall extend laterally to the outermost limits of the trench.

**3.3.2*MANHOLE BEDDING**

All precast manholes, except for tee sections, shall be installed on main line pipe bedding material with the minimum thickness of bedding to be six inches (6”). Tee sections shall be placed on concrete bedding extending longitudinally to within one foot (1’) of each end of the tee section. The tee section shall have a minimum bedding of eight inches (8”) beneath the main line pipe. The concrete bedding shall be reinforced with No. 5 bars at eight-inch (8”) centers each way.

The concrete bedding shall be placed so that the tee section has a minimum bearing of the bedding of one-fourth (1/4) of the circumference of the main line pipe.

All manhole bedding shall extend laterally to the outermost limits of the trench excavation.

**3.4*INITIAL BACKFILLING**

The backfill material from the top of the cradle of bedding material to a point one foot (1’) above the uppermost top of the pipe shall be the specified bedding material for main line pipe.

Regulations and Specifications Greene County, Ohio Part C--Construction Procedures

# Illustration of Pipeline Bedding and Backfill Requirements

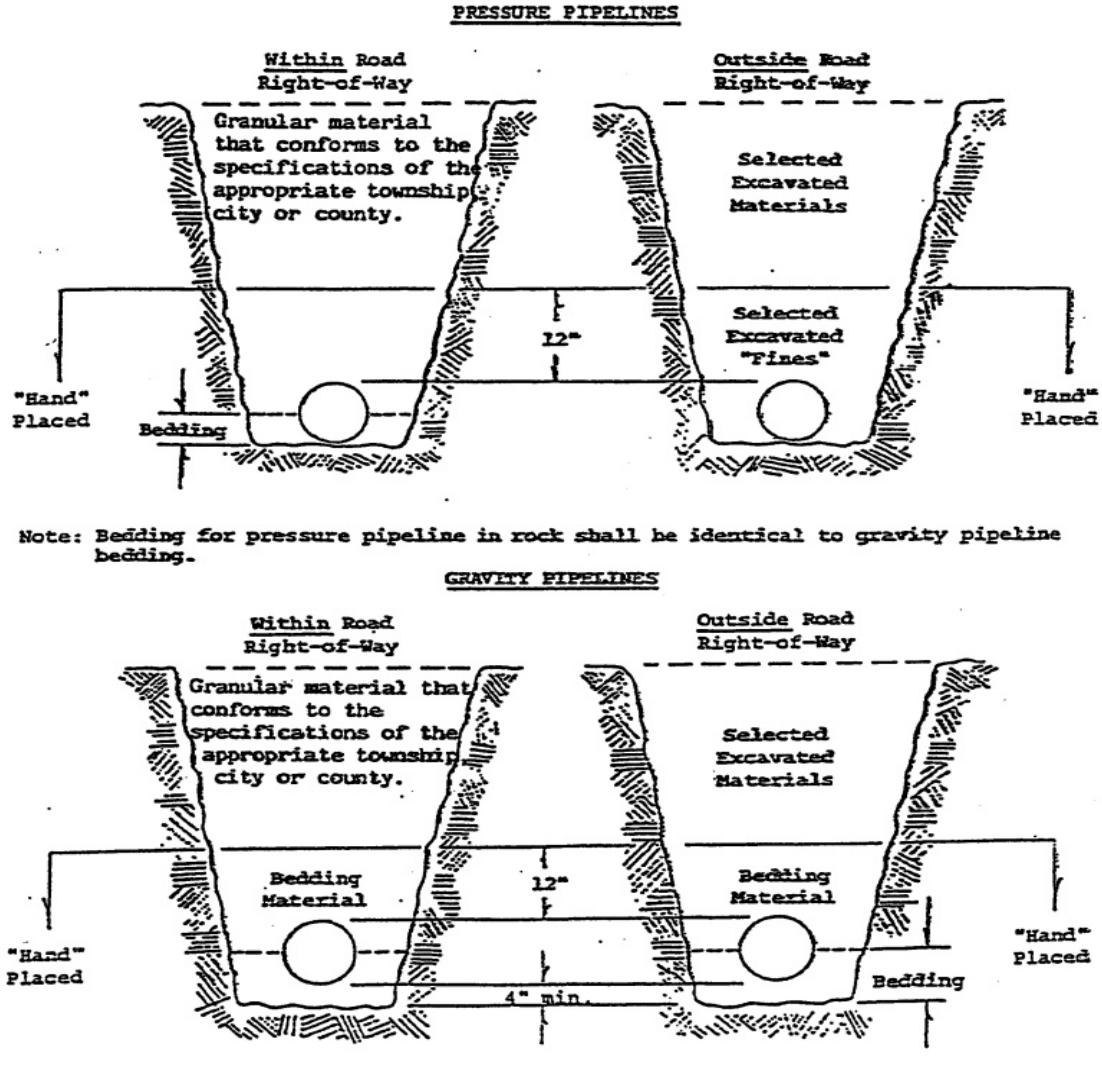

## Sewer Pipe Installation

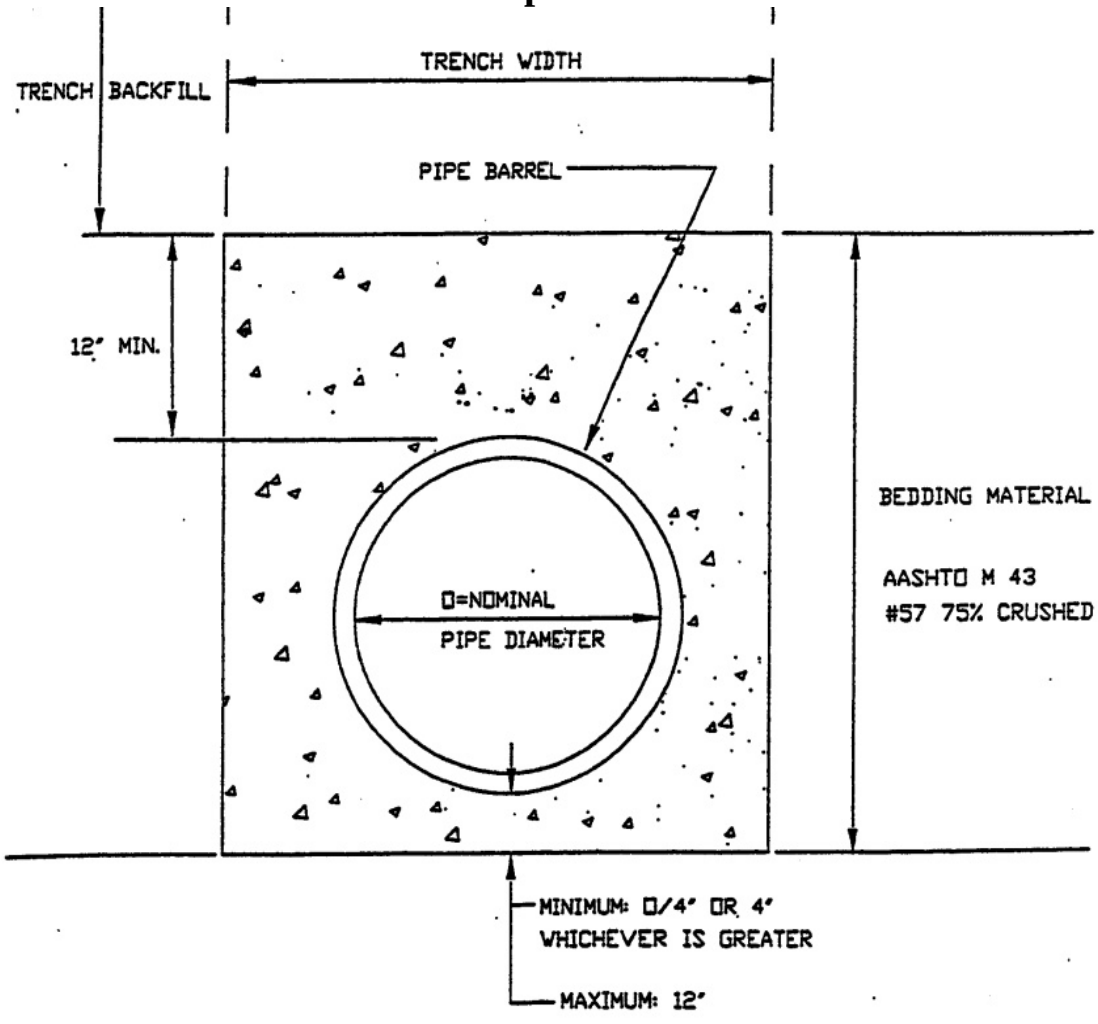


The Contractor shall use special care in placing this portion of the backfill so as to avoid injuring or moving pipe. The initial backfill material shall be thoroughly compacted by hand tamping and shall extend laterally to the outermost limits of the trench.

**3.5*BALANCE OF BACKFILL**

The construction drawings show where the balance of the backfill shall be gravel material. This shall be suitably compacted by puddling with water after the trench is backfilled. The Contractor shall furnish the necessary water and equipment to properly settle the gravel backfill by the puddling method.

Where the construction drawings do not indicate gravel trench backfill, the Contractor may backfill the balance of the trench from a point one foot (1') above the top of the pipe with excavated materials. Care shall be taken to carry backfill up evenly in the trench. The backfill shall be neatly rounded over the top of the trench to a sufficient height to allow for settlement to grade consolidation. Trenches shall not lay open for periods greater than twenty-four (24) hours after installation of the main line. No more than one hundred feet (100') of main line shall remain open overnight and adequate safety precautions shall be taken to avoid on-site injuries during and after working hours.

## 3.6*INSTALLING MANHOLES

### 3.6.1*PRECAST MANHOLE BASE

Precast bases for gravity pipelines thirty-three inch (33") diameter and smaller shall be installed level and true to established line and grade on a six-inch (6") layer of thoroughly compacted bedding material. The bedding material shall be properly shaped to provide continuous bearing and support for the bottom slab of the precast base.

Precast bases for gravity pipelines thirty-six inch (36") diameter and larger shall be tee sections installed on a reinforced concrete foundation. The tee section shall be securely blocked and braced true to established horizontal and vertical alignment while the concrete foundation is poured in place. The concrete foundation shall extend a minimum of eight inches (8") beneath the lowermost dimension of the tee section. The reinforcing bars shall be firmly held in place a distance of five inches (5") beneath the lowermost dimension of the tee section.

The initial backfill for all precast manhole bases shall be gravel thoroughly compacted by hand tamping and extending laterally to the outermost limits of the trench. Initial backfill shall extend from the trench bottom, bedding material or concrete foundation upward to within one inch (1") of the uppermost limit of the precast base or tee section.

### 3.6.2*PRECAST MANHOLE RISER AND CONE

Riser and cone sections shall not be installed on tee sections for a minimum of seventy-two (72) hours after the concrete foundation has been placed.

Riser and cone sections shall not be installed on precast bases or tee sections until the initial backfill has been placed.

Care shall be taken to insure that the balance of the backfill material be brought-up evenly around the riser and cone sections to prevent movement or misalignment of these manhole components.

All lifting or handling holes in precast bases, risers, or cones shall be blind.

The exterior of manholes shall be waterproofed with a heavy duty, cement-based material to fill and seal pores and voids. Material shall be "THOROSEAL," Sed-N-Seal, or approved equal. Material shall be applied in strict accordance with manufacturer's instructions.

### 3.6.3*MANHOLE TOPS

The tops of all non-pressure and pressure type precast manholes shall be finished with concrete adjustment rings, mortared in place.

Tops of pressure and non-pressure type precast manholes shall not be finished with concrete bricks.

### 3.6.4*MANHOLE FRAMES AND COVERS

Frames shall be centered accurately on the top of the manhole at the elevations shown on the construction drawings. Maximum distance between the top of the cone and the top of the frame casting shall be twenty-four inches (24"). Care shall be exercised during the backfilling and/or repaving operations so that the frame shall not be displaced.

Pressure type frames shall be bolted to the four (4) anchor bolts provided in the cone section. Pressure type lids shall be bolted to the frame casting.

### 3.6.5*GRAVITY PIPELINE CONNECTIONS

All gravity pipelines, twenty-four inch (24") diameter and smaller shall connect to precast manhole bases with a flexible watertight joint. This joint shall be installed in the field according to the instructions of the manufacturer of the joint material. Dura-Seal III, Press Wedge II and approved equal joints shall be installed with a formed access space in the manhole base to facilitate installation and to allow maintenance from inside the manhole.

All gravity pipelines, twenty-seven inch (27”) through thirty-three inch (33”) diameter shall connect to precast manhole bases by inserting the pipe into flexible connection as per Section 3.6.5, Paragraph 1.

All tees for drop connections shall be inserted into manhole riser sections, through holes provided, with a flexible water tight joint.

All pipe entering the manhole shall be flush with the inside wall of the manhole.

**3.6.6*MANHOLE FLOW CHANNELS**

The flow channel shall be constructed within the precast base using 4,200 psi concrete.

The lower half of the channel shall be circular in cross section to match the cross section of the pipeline from spring line to invert. The upper portion of the channel shall be constructed with sloping sides so that the width of the channel at the walkway is one inch (1”) larger than the inside diameter of the sewer pipe. The walkway around the channel shall be at the elevation of the crown of the main-line gravity pipeline at the channel edge and slope up and away from the channel at one inch (1”) per foot.

Changes of direction of flow within the manhole shall be made with a channel with as long a radius as possible. All incoming pipelines into a manhole shall discharge into the outgoing pipeline through channels formed in such a manner as to prevent flow turbulence.

Cross sections of channels shall vary uniformly from inlet to outlet where pipelines of varying sizes enter and leave a manhole.

**3.7*INSTALLING GRAVITY SERVICE LINES**

**3.7.1*GENERAL**

Gravity service connections to main line gravity pipes shall not be installed until their location, which shall always be between manholes and not located on dead end lines, has been approved by the County.

Gravity service lines shall not be installed until the County has indicated the location and depth of the upper end thereof. Gravity service lines shall terminate at a point ten feet (10’) inside the boundary line of the property to be served unless otherwise indicated by the County. Gravity service lines will be fitted with a stopper into the upper end. The slope of the service line from upper end toward the main line gravity pipeline shall be two feet (2’) per one hundred lineal feet (100 L.F.) of service line unless otherwise authorized or approved by the County. The service line shall be laid on a straight grade unless otherwise directed or approved by the County. No sewer line may be cut or broken in the field to permit the installation of a service wye or tee. (See drawing on Page 50 of this section for branching sewer lateral for two-family residence.)

# Branching Sewer Lateral for Two-Family Residence

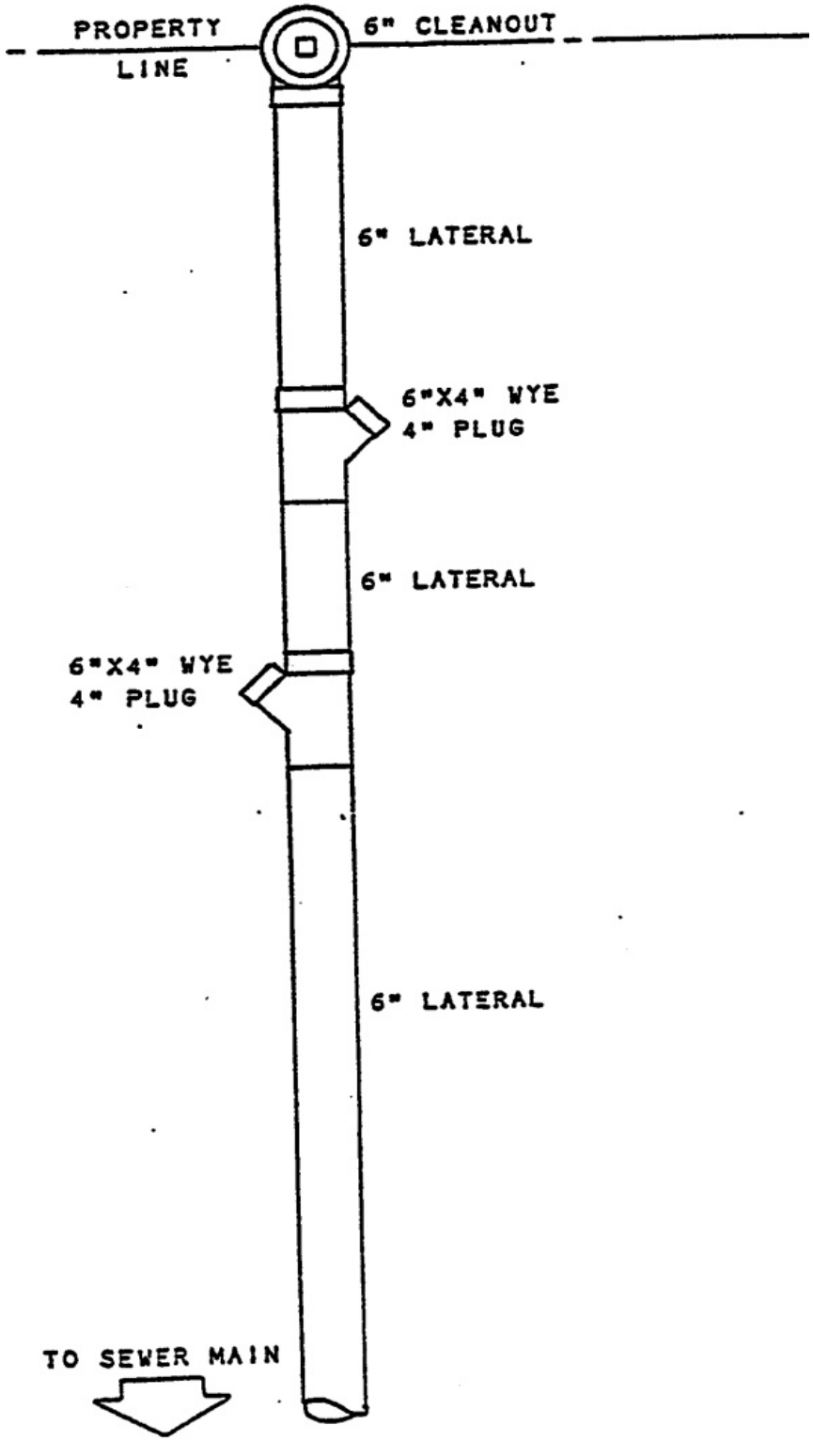

# Drop Connection

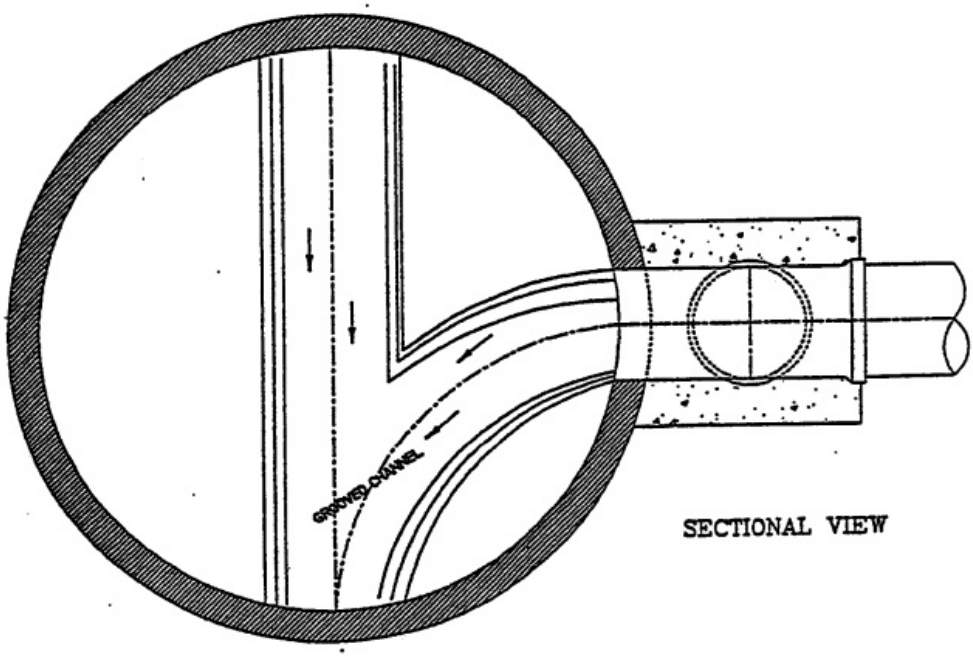


DROP CONNECTION SCHEDULE

| "A" | MIN. |
|---|---|
| 8",10" & 12" | 8" |
| 15" & 18" | 10" |
| 21" & 24" | 12" |

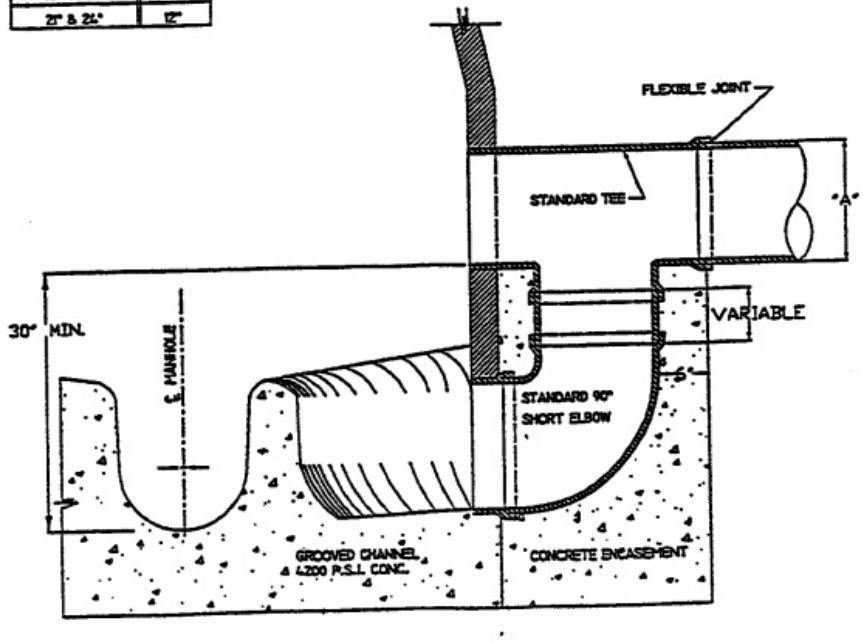

# Vented Water Tight Manhole Detail

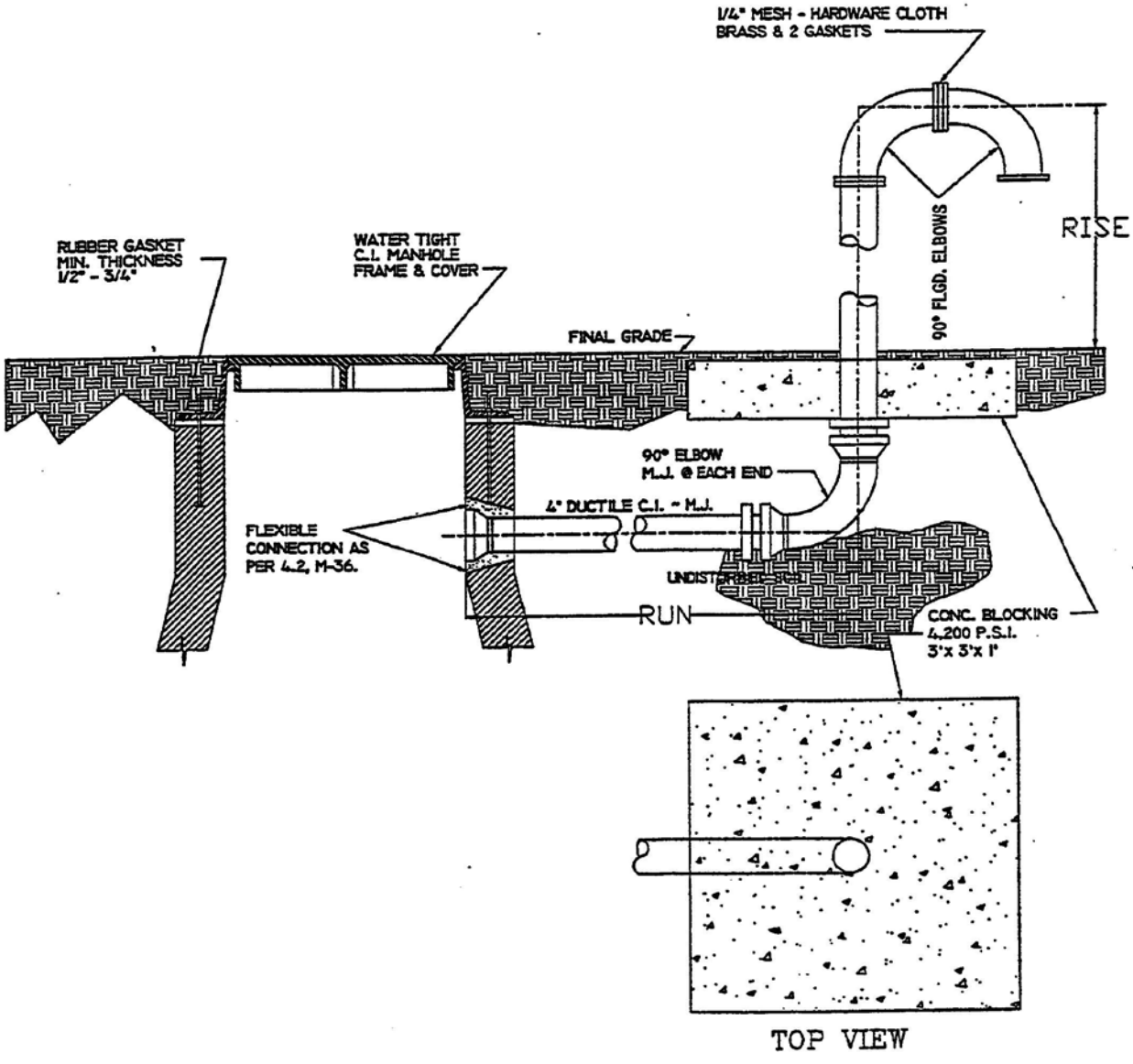


**3.7.2*INSTALLATION**

Appropriate sections of this Specification for trench excavation, pipeline installation, flushing, cleaning and testing, pipe bedding, initial backfill and balance of backfill shall apply to the installation of the specific type of material used for the gravity service lines. The balance of backfill material shall be gravel for all gravity service lines installed within street or roadway rights-of-way.

**3.7.3*SERVICE LINE POLE**

The Contractor shall install a 2" x 4" wooden pole at the immediate upper end of all gravity service lines. The pole shall be installed in a vertical plane extending from the bottom of the service pipe to a point eight inches (8") above-ground elevation. Care shall be exercised to keep the pole plumb during backfilling operations and to preserve the above-ground extension during cleanup and restoration operations. **The contractor shall stamp an "S" for sewer service and a "W" for water service in the curb at the points where the services cross perpendicular to the curb.**

## 3.8*CLEANING AND ALIGNMENT CHECK

The Contractor shall clean out the completed gravity pipeline of all sand, gravel, stones, or other debris by pulling proper size buckets through the sewer. Other methods such as flushing may be used if approved by the County. Particular care shall be taken at the location where a connection is made to an existing system to prevent any foreign material from entering an operating pipeline. The outlet for a new gravity pipeline shall start three (3) pipe lengths away from the existing manhole and not be connected until project is completed.

Sanitary sewers must be cleaned and televised (videotaped) by the developer, contractor or their representatives. Greene County Sanitary Engineering Department inspector to witness cleaning and televising activities. Greene County Sanitary Engineering Department shall receive a copy of the videotape for review and approval. Videotape shall become the property of Greene County Sanitary Engineering Department. If the interior of the pipe shows any misalignment, displaced pipe, or any other defects, the defects, designated by the County, shall be remedied by the Contractor.

## 3.9*TESTING

Sanitary sewers shall be cleaned and televised prior to any leakage testing.

### 3.9.1*LEAKAGE

The Contractor shall furnish all labor, equipment and materials which are required to test the sections of the gravity pipeline for tightness. The infiltration test, the exfiltration test, or if so determined by the Sanitary Engineer, both may be ordered by the County. All tests shall be conducted under the supervision of the County.

The Contractor shall determine the locations where excess water is entering or leaving the pipeline, if the amount of leakage exceeds the allowable. The gravity pipeline and/or manholes shall be repaired and retested until the leakage of the system is within the allowable limits as specified.

The tests for leakage shall include those portions of the service lines to be installed by the Contractor.

All visible leaks shall be repaired by the Contractor whether the amount of leakage exceeds the allowable or not.

If determined by the Project Engineer to be an acceptable method of repair, grouting may be used to repair leaking sewer joints provided 3M Elastomeric Sewer Grouting Compound, or approved equal, is used.

### 3.9.2*INFILTRATION TEST

The infiltration test will be conducted on that portion of the pipeline where the top of the pipe at the upper manhole is a minimum of one foot (1’) below the level of the ground water table.

The infiltration test shall be made by installing a weir or other measuring device approved by the County in the lower end of the pipeline section to be tested. The incoming pipe or pipes in the upper end of the test section shall be securely sealed. The quantity of ground water infiltrating into the test section shall be measured. The allowable leakage for gravity pipelines shall not exceed one hundred (100) gallons per day per mile of pipe per inch of pipe diameter.

Each size of sewer pipe shall be tested separately. Each test section shall not exceed one thousand feet (1,000’) of sewer pipe.

### 3.9.3*EXFILTRATION TEST

The exfiltration test shall be conducted over a twenty (20) minute period. Water for testing shall be supplied by the Contractor.
The elevation of the level of the water in the manhole and the drop in the level of the water in the upper manhole shall be carefully measured during the duration of the test. The allowable

# Test for Leakage
# (Exfiltration)

This table shows the maximum allowable loss in inches for a twenty (20) minute period.

The losses shown are for the barrel section in four foot (4') diameter manholes except for twenty-seven inch (27"), thirty-inch (30"), and thirty-three inch (33") pipe, which is measurement in the barrel of the five foot (5') diameter manholes.

This test shall be used where the ground water table is not continuous throughout the span of sewer to be tested or where the ground water level is less than one foot (1') above the top of the sewer pipe at the upper manhole of the span to be tested.

Maximum allowable drop in inches in twenty (20) minutes in four-foot (4') diameter M.H. one hundred (100) gallons per inch of diameter per mile of pipe per day.

| Diameter | 50' | 100' | 150' | 200' | 250' | 300' | 350' | 400' | 450' | 500' |
|---|---|---|---|---|---|---|---|---|---|---|
| **4"** | | | | | 1/32" | | | | | 1/16" |
| **8"** | | 1/32" | | 1/16" | 1/16" | 3/32" | | 3/32" | | 1/8" |
| **10"** | | 1/32" | | 1/16" | 3/32" | 3/32" | | 1/8" | | 5/32" |
| **12"** | | 1/16" | | 3/32" | 3/32" | 1/8" | | 5/32" | | 3/16" |
| **15"** | | 1/16" | 3/32" | 1/8" | 1/8" | 5/32" | | 7/32" | | 1/4" |
| **18"** | | 1/16" | 3/32" | 1/8" | 5/32" | 3/16" | 7/32" | 1/4" | 9/32" | 5/16" |
| **21"** | | 3/32" | | 5/32" | 3/16" | 7/32" | | 9/32" | | 11/32" |
| **24"** | | 1/8" | | 5/32" | 3/16" | 7/32" | | 5/16" | | 3/8" |
| **27"** | | 3/32" | | 5/32" | 7/32" | 1/4" | | 11/32" | | 7/16" |
| **30"** | | 3/32" | 5/32" | 7/32" | 1/4" | 5/16" | | 13/32" | | 1/2" |
| **33"** | | 1/8" | | 7/32" | 9/32" | 11/32" | | 15/32" | | 9/16" |
| **36"** | | 1/8" | 3/16" | 1/4" | 5/16" | 3/8" | | 1/2" | | 5/8" |
| **42"** | | 1/8" | 3/16" | 1/4" | 11/32" | 13/32" | | 17/32" | | 11/16" |
| **48"** | 3/32" | 5/32" | 1/4" | 5/16" | 13/32" | 1/2" | 9/16" | 21/32" | | 13/16" |
| **54"** | 3/32" | 3/16" | 9/32" | 11/32" | 7/16" | 17/32" | 5/8" | 11/16" | 25/32" | 7/8" |
| **60"** | 3/32" | 3/16" | 5/16" | 13/32" | 1/2" | 19/32" | 11/16" | 13/16" | 29/32" | 1" |

# Test for Leakage
# (Infiltration)

This table shows the maximum allowable loss in gallons for a ten (10) minute period.

The losses shown would be captured in the downstream manhole by plugging the sewer pipe at the manhole wall and collecting the water through a tap in sewer plug for measurement in a calibrated container.

The test shall be used where the ground water table is a minimum of one foot (1') above the crown of the pipe in the upper manhole and continuous throughout the span.

| Diameter | 100' | 200' | 350' | 400' | 500' | 600' | 700' | 800' | 900' | 1000' |
|---|---|---|---|---|---|---|---|---|---|---|
| **4"** | .06 | .11 | .16 | .21 | .27 | .32 | .37 | .42 | .48 | .53 |
| **8"** | .11 | .21 | .32 | .42 | .53 | .63 | .74 | .84 | .95 | 1.05 |
| **10"** | .13 | .27 | .40 | .53 | .66 | .79 | .92 | 1.05 | 1.19 | 1.32 |
| **12"** | .16 | .32 | .48 | .63 | .79 | .95 | 1.11 | 1.27 | 1.42 | 1.58 |
| **15"** | .20 | .40 | .59 | .79 | .99 | 1.19 | 1.38 | 1.58 | 1.78 | 1.98 |
| **18"** | .24 | .48 | .71 | .95 | 1.19 | 1.42 | 1.66 | 1.90 | 2.13 | 2.37 |
| **21"** | .28 | .55 | .83 | 1.11 | 1.38 | 1.66 | 1.94 | 2.21 | 2.49 | 2.76 |
| **24"** | .32 | .63 | .95 | 1.29 | 1.58 | 1.90 | 2.21 | 2.53 | 2.84 | 3.16 |
| **27"** | .36 | .71 | 1.07 | 1.42 | 1.78 | 2.13 | 2.49 | 2.84 | 3.20 | 3.55 |
| **30"** | .40 | .79 | 1.19 | 1.58 | 1.98 | 2.37 | 2.76 | 3.16 | 3.55 | 3.95 |
| **33"** | .44 | .87 | 1.30 | 1.74 | 2.17 | 2.61 | 3.04 | 3.47 | 3.91 | 4.34 |
| **36"** | .48 | .95 | 1.42 | 1.90 | 2.37 | 2.84 | 3.32 | 3.79 | 4.26 | 4.74 |
| **42"** | .55 | 1.11 | 1.66 | 2.21 | 2.76 | 3.32 | 3.87 | 4.42 | 4.97 | 5.53 |
| **48"** | .63 | 1.27 | 1.90 | 2.53 | 3.16 | 3.79 | 4.42 | 5.05 | 5.68 | 6.32 |
| **54"** | .71 | 1.42 | 2.13 | 2.84 | 3.55 | 4.26 | 4.97 | 5.68 | 6.39 | 7.10 |
| **60"** | .79 | 1.58 | 2.37 | 3.16 | 3.95 | 4.74 | 5.53 | 6.32 | 7.10 | 7.89 |

# ASTM C 828 Air Test Table (VCP)
# TABLE XI

Specification time (minutes) required for pressure drop from 3 1/2 to 2 1/2 psi when testing one pipe diameter only.

| Length of Pipe, Feet | Pipe Diameter, Inches | | | | 12 |
|---|---|---|---|---|---|
| 25 | 0:04 | 0:10 | 0:18 | 0:28 | 0:40 |
| 50 | 0:09 | 0:20 | 0:35 | 0:55 | 1:19 |
| 75 | 0:13 | 0:30 | 0:53 | 1:23 | 1:59 |
| 100 | 0:18 | 0:40 | 1:10 | 1:50 | 2:38 |
| 125 | 0:22 | 0:50 | 1:28 | 2:18 | 3:18 |
| 150 | 0:26 | 0:59 | 1:46 | 2:45 | 3:58 |
| 175 | 0:31 | 1:09 | 2:03 | 3:13 | 4:37 |
| 200 | 0:35 | 1:19 | 2:21 | 3:40 | 5:17 |
| 225 | 0:40 | 1:29 | 2:38 | 4:08 | 5:40 |
| 250 | 0:44 | 1:39 | 2:56 | 4:35 | |
| 275 | 0:48 | 1:49 | 3:14 | 4:43 | |
| 300 | 0:53 | 1:59 | 3:31 | | |
| 350 | 1:02 | 2:19 | 3:47 | | |
| 400 | 1:10 | 2:38 | | | 6:03 |
| 450 | 1:19 | 2:50 | | | 6:48 |
| 500 | 1:28 | | | 5:14 | 7:34 |

# ASTM C 924 Concrete Pipe

**TABLE 1**
**Minimum Test Time**
**For Various Pipe Sizes**

| Nominal Pipe Size, Inches | T (time) min/100 ft. |
|---|---|
| 4 | 0.3 |
| 6 | 0.7 |
| 8 | 1.2 |
| 10 | 1.5 |
| 12 | 1.8 |
| 15 | 2.1 |
| 18 | 2.4 |
| 21 | 3.0 |
| 24 | 3.6 |

**TABLE 2**
**Allowable Air Loss For**
**Various Pipe Sizes**

| Nominal Pipe Size, Inches | Q ft.3/min. |
|---|---|
| 4 | 2 |
| 6 | 2 |
| 8 | 2 |
| 10 | 2.5 |
| 12 | 3 |
| 15 | 4 |
| 18 | 5 |
| 21 | 5.5 |
| 24 | 6 |

# Table I
# Specification Time Required for a 1.0 PSIG Pressure Drop for Size and Length of Pipe Indicated for Q = 0.0015

| | | | | Specification Time for Length (L) Shown (Min:Sec) | | | | | | | |
|---|---|---|---|---|---|---|---|---|---|---|---|
| 4 Time for Longer Length (sec) | 4 Time for Longer Length (sec) | 4 Time for Longer Length (sec) | 4 Time for Longer Length (sec) | 100 ft. | 150 ft. | 200 ft. | 250 ft. | 300 ft. | 350 ft. | 400 ft. | 450 ft. |
| 4 | 3:45 | 597 | .380 L | 3:46 | 3:46 | 3:46 | 3:46 | 3:46 | 3:46 | 3:46 | 3:46 |
| 6 | 5:40 | 398 | .854 L | 5:40 | 5:40 | 5:40 | 5:40 | 5:40 | 5:40 | 5:42 | 6:24 |
| 8 | 7:34 | 298 | 1.520 L | 7:34 | 7:34 | 7:34 | 7:34 | 7:36 | 8:52 | 10:08 | 11:24 |
| 10 | 9:26 | 239 | 2.374 L | 9:26 | 9:26 | 9:26 | 9:53 | 11:52 | 13:51 | 15:49 | 17:48 |
| 12 | 11:20 | 199 | 3.418 L | 11:20 | 11:20 | 11:24 | 14:15 | 17:05 | 19:56 | 22:47 | 25:38 |
| 15 | 14:10 | 159 | 5.342 L | 14:10 | 14:10 | 17:48 | 22:15 | 26:42 | 31:09 | 35:36 | 40:04 |
| 18 | 17:00 | 133 | 7.692 L | 17:00 | 19:13 | 25:38 | 32:03 | 38:27 | 44:52 | 51:16 | 57:41 |
| 21 | 19:50 | 114 | 10.470 L | 19:50 | 26:10 | 34:54 | 43:37 | 52:21 | 61:00 | 69:48 | 78:31 |
| 24 | 22:40 | 99 | 13.674 L | 22:47 | 34:11 | 45:34 | 56:58 | 68:22 | 79:46 | 91:10 | 102:33 |
| 27 | 25:30 | 88 | 17.306 L | 28:51 | 43:16 | 57:41 | 72:07 | 86:32 | 100:57 | 115:22 | 129:48 |
| 30 | 28:20 | 80 | 21.366 L | 35:37 | 53:25 | 71:13 | 89:02 | 106:50 | 124:38 | 142:26 | 160:15 |
| 33 | 31:10 | 72 | 25.852 L | 43:05 | 64:38 | 86:10 | 107:43 | 129:16 | 150:43 | 172:21 | 193:53 |
| 36 | 34:00 | 66 | 30.768 L | 51:17 | 76:55 | 102:34 | 128:12 | 153:50 | 179:29 | 205:07 | 230:46 |

# Air Test Data Sheet

Owner (Name of City, District, etc.) _____ Test No. _____

Identification of Pipe Installation (job name, location, contract number, etc.) _____

Field Test Data: (to be filled in by the Inspector)

Date: _____ Specified Maximum Pressure Drop: _____ psig

Identification of Pipe Material Installed: _____

| **Pipe Under Test** | | | | **Specifi -cation Time** | **Field Test Operations Data** | | | | | |
|---|---|---|---|---|---|---|---|---|---|---|
| Upstream MH Sta. # | Downstream MH Sta. # | Dia. D (in) | Length L (in) | Refer to UNI-A6 (min:sec) | Pressure Initially Raised To (psig) | Time Allowed for Pressure to Stabilize | Start Test Pressure (psig) | Stop Test Pressure (psig) | Elapsed Time (min:sec) | Pass or Fail (P or F) |
| | | | | | | | | | | |
| | | | | | | | | | | |
| | | | | | | | | | | |
| | | | | | | | | | | |
| | | | | | | | | | | |
| | | | | | | | | | | |
| | | | | | | | | | | |
| | | | | | | | | | | |
| | | | | | | | | | | |
| | | | | | | | | | | |
| | | | | | | | | | | |
| | | | | | | | | | | |
| | | | | | | | | | | |
| | | | | | | | | | | |
| | | | | | | | | | | |
| | | | | | | | | | | |
| | | | | | | | | | | |
| | | | | | | | | | | |
| | | | | | | | | | | |
| | | | | | | | | | | |
| | | | | | | | | | | |

.

# Air Test Data Sheet (continued)

Owner (Name of City, District, etc.) _____ Test No. _____

Identification of Pipe Installation (job name, location, contract number, etc.) _____

## If a section fails, the following items should be completed:

Identify section(s) that failed: _____

_____

Leak (was) (was not) located. Method used: _____

_____

Description of leakage found: _____

_____

Description of corrective action taken: _____

_____

For test results after repair, refer to Test No. _____, Inspector _____

Leakage for the hydrostatic test shall not exceed one hundred (100) gallons per day per mile of pipe per inch of inside diameter of the pipe tested.

The exfiltration test shall be conducted between two (2) successive manholes. The lower end of the pipeline and all inlet pipes of the upper manhole shall be sealed with pipe stoppers. The span of gravity pipeline to be tested shall be filled with water to a point four feet (4') above the top of the crown of the pipeline in the upper manhole, or the outside water table, whichever is higher. The water shall stand in the pipe and manhole so that absorption can take place, if the concrete in the manhole or pipeline is dry.

**3.9.4*AIR TESTING**

The equipment and personnel used to conduct the Low Pressure Air Test for sanitary sewers shall be subject to the approval of the Sanitary Engineer.

The Contractor may desire to make an air test prior to backfilling for his own purposes. However, the acceptance air test shall be made after backfilling has been completed and compacted.

All wyes, tees, or end of side sewer stubs shall be plugged with flexible-joint caps, or acceptable alternate, securely fastened to withstand the internal test pressures. Such plugs or caps shall be readily removable, and their removal shall provide a socket suitable for making a flexible-jointed lateral connection or extension.

Immediately following the pipe cleaning, the pipe installation shall be tested with low-pressure air. Air shall be slowly supplied to the plugged pipe installation until the internal air pressure reaches four pounds (4 lbs.) per square inch greater than the average back pressure of any ground water that may submerge the pipe. At least two (2) minutes shall be allowed for temperature stabilization before proceeding further.

The pipeline shall be considered acceptable, when tested at an average pressure of three pounds (3 lbs.) per square inch greater than the average back pressure of any ground water that may submerge the pipe, if: (1) the total rate of air loss from any section tested in its entirety between manhole and cleanout structures does not exceed two (2) cubic feet per minutes, or, (2) the section under test does not lose air at a rate greater than 0.0030 cubic feet per minute per square foot of internal pipe surface.

The contractor shall follow the test procedures and guidelines set forth in the following standards:

C924 - Standard Practice for Testing Concrete Pipe Sewer Lines by Low Pressure Air Test Method

C828 - Low Pressure Air Test of Vitrified Clay Pipe Lines (4"-12")

If the pipe installation fails to meet these requirements, the Contractor shall determine at his own expense the source or sources of leakage, and he shall repair (if the extent and type of repairs proposed by the Contractor appear reasonable to the Engineer) or replace all defective materials or workmanship. The completed pipe installation shall meet the requirements of this test, or the alternative water exfiltration or infiltration test, before being considered acceptable.

**3.9.5*DEFLECTION TESTING**

**3.9.5.1*ABS/PVC COMPOSITE PIPE D2680**

All ABS or PVC main line sewer shall not exceed five percent (5%) deflection and shall be tested for deflection ninety (90) days or more after the sewer trench has been backfilled to finished grade. The deflection test must be conducted by the Contractor or a subcontractor approved by the Owner. The methods and schedules must be approved by the County.

The deflection test shall be performed with a "go, no go" mandrel having a minimum of nine (9) evenly spaced arms for an eight-inch (8"), ten-inch (10"), twelve-inch (12"), and fifteen-inch (15") sewer. The Contractor shall hand-pull the mandrel through the sewer lines. Mandrel shall be a one-person pull with normal effort only. Use of re-rounders, etc., is not permitted. The mandrel shall be supplied by the County, and it shall have a minimum size, based on pipe diameter, as shown on the next page:

**ABS or PVC Pipe**
**Minimum Mandrel Size**
**Five Percent (5%) Deflection**

| Nominal Pipe Diameter (Inches) | Minimum I.D. | Maximum I.D. |
|---|---|---|
| 8 | 7.36 | 7.50 |
| 10 | 9.26 | 9.36 |
| 12 | 11.16 | 11.24 |
| 15 | 14.01 | 14.06 |

The Contractor must provide a suitable proving ring for each mandrel. Any pipe failing the deflection test shall be replaced, and all costs associated with the replacement and associated restoration shall be the responsibility of the Contractor.

**3.9.5.2*PVC D3034 SDR35**

PVC sewer pipe diameter shall not exceed five percent (5%) deflection and all installed mainline pipe shall be tested for deflection ninety (90) days or more after the trench has been backfilled to final grade. Mandrels are to be used for the deflection test and are to be provided by the Contractor. The Contractor shall hand-pull the "go, no go" mandrel through the sewer lines. No mechanical devices are to be used.

The "go, no go" mandrel shall have a minimum of nine (9) evenly spaced arms for an eight-inch (8"), ten-inch (10"), twelve-inch (12"), and fifteen-inch (15") sewer and permit five percent (5%) or less deflection in the installed pipe. Dimensions for the mandrels are listed below:

**PVC Pipe**
**Minimum Mandrel Size**
**Five Percent (5%) Deflection**

| Nominal Pipe Diameter (Inches) | Average I.D. |
|---|---|
| 8 | 7.50 |
| 10 | 9.37 |
| 12 | 11.15 |
| 15 | 13.66 |

The Contractor must provide a suitable proving ring for each mandrel. Any pipe failing the deflection test shall be replaced, and all costs associated with the replacement and associated restoration shall be the responsibility of the Contractor.

**3.9.6*VACUUM TESTING OF MANHOLES**

Vacuum testing of manholes shall conform to ASTM 1244.

1. Each manhole shall be tested immediately after assembly and prior to backfilling.
2. All lift holes are to be blind.
3. No grout will be placed in the horizontal joints before testing.
4. All pipes entering the manhole shall be plugged, taking care to securely brace the plugs from being drawn into the manhole.
5. The test head shall be placed at the inside of the top of the cone section and the seal inflated in accordance with the manufacturer's recommendation.
6. A vacuum of ten inches (10") of mercury shall be drawn and the vacuum pump shut off. With the valves closed, the time shall be measured for the vacuum to drop to nine inches (9"). The manhole shall pass if the time meets or exceeds the following table.

**MINIMUM TEST TIME FOR VARIOUS MANHOLES DIAMETERS**

| | Diameter, in. | | | | | | | | |
|---|---|---|---|---|---|---|---|---|---|
| (ft) | 30 | 33 | 36 | 42 | 48 | 54 | 60 | 66 | 72 |
| | Time, s | | | | | | | | |
| 8 | 11 | 12 | 14 | 17 | 20 | 23 | 26 | 29 | 33 |
| 10 | 14 | 15 | 18 | 21 | 25 | 29 | 33 | 36 | 41 |
| 12 | 17 | 18 | 21 | 25 | 30 | 35 | 39 | 43 | 49 |
| 14 | 20 | 21 | 25 | 30 | 35 | 41 | 46 | 51 | 57 |
| 16 | 22 | 24 | 39 | 34 | 40 | 46 | 52 | 58 | 67 |
| 18 | 25 | 27 | 32 | 38 | 45 | 52 | 59 | 65 | 73 |
| 20 | 28 | 30 | 35 | 42 | 50 | 53 | 65 | 72 | 81 |
| 22 | 31 | 33 | 39 | 46 | 55 | 64 | 72 | 79 | 89 |
| 24 | 33 | 36 | 42 | 51 | 59 | 64 | 78 | 87 | 97 |
| 26 | 36 | 39 | 46 | 55 | 64 | 75 | 85 | 94 | 105 |
| 28 | 39 | 42 | 49 | 59 | 69 | 81 | 91 | 101 | 113 |
| 30 | 42 | 45 | 53 | 63 | 74 | 87 | 98 | 108 | 121 |

7. If the manhole fails the initial test, necessary repairs shall be made with a non-shrink grout while the vacuum is still being drawn. Retesting shall proceed until a satisfactory test is obtained.

**3.9.7*MANHOLE CHIMNEY SEALS**

Where necessary due to leakage or where specified by Greene County Sanitary Engineering Department Director, Cretex Internal Manhole Chimney seals shall be utilized as per manufacturer's specifications.

**3.9.8*SANITARY SEWER TOLERANCES**

As per Part A, "Regulations," Section 6.02, paragraph C.2c, sanitary sewers must be cleaned and televised (videotaped) by the developer or his representative prior to seventy-five percent (75%) release. The camera shall be set on skids and adjusted so that the bottom of the lens coincides with twenty-five percent (25%) of the diameter of the sewer line being televised. All work covered in this section shall be witnessed by a Greene County Sanitary Engineering Department Inspector.

The sanitary sewer line shall be flushed with water prior to videotaping the line. The water shall not be vacuumed out of the line prior to televising.

During the course of the videotaping, should the camera lens encounter standing water, the sanitary sewer in that area shall be considered unacceptable and shall be dug up and replaced.

During the course of the videotaping, Greene County Sanitary Engineering Department may decide to do another televised inspection at the time of the mandrel test. This follow up televised inspection shall be performed by Greene County Sanitary Engineering Department.

# SECTION 4

## 4*INSURANCE, PROTECTION, AND GUARANTEES

### 4.1*GENERAL

**4.1C***The insurance and indemnification provision of the contract shall be as follows.

**4.1C.1***The Contractor prior to commencing work shall provide at his own cost and expense the following insurance to Greene County, which insurance shall be evidenced by certificates and/or policies as determined by the County. Each certificate of policy shall require that, thirty (30) days prior to cancellation or material change in the policies, notice thereof shall be given to the Prosecuting Attorney by certified mail, return receipt requested, for all of the following stated insurance policies. All such notices shall name the Contractor and identify the contract number.

A. Workers' Compensation Statutory - in compliance with the Compensation Law of the state of Ohio.

B. General Liability Insurance with a minimum limit of liability of $1,000,000 per occurrence and $1,000,000 aggregate. The insurance shall indicate on the Certificate of Insurance the following coverage's:
   1. Premises - Operations
   2. Independent Contractor and Subcontractor
   3. Products and Completed Operations
   4. Broad Form Contractual

Additional coverage's and limits may be required based upon the particular services contracted. If such additional coverage and limits are required for a specific contract, those requirements will be described in the "Special Conditions" of the contract specifications.

All contracts involving the use of explosives and demolition shall provide the above coverage with proof the XCU (explosion, collapse or underground) is covered.

C. Automobile Liability Insurance with minimum limits of liability of $1,000,000 per occurrence combined single limit, unless otherwise indicated in the "Special Conditions" of the Contract specifications. This insurance shall include for bodily injury and property damage the following coverage's:
   1. Owned automobiles
   2. Hired automobiles
   3. Non-owned automobiles

D. Protective Liability Insurance: Owners and Contractors. The Contractor shall provide the original and duplicate policy of insurance to the County. This insurance contract shall name Greene County as the insured and remain in effect until the contract is accepted by the Board of Greene County Commissioners.
The insurance shall provide minimum limits of liability of $1,000,000 per occurrence and $1,000,000 aggregate. Said insurance shall provide that the term "Owner" or "The Commissioners of Greene County" shall be deemed to include all authorities, boards, bureaus, commissions, divisions, departments, districts, and offices of the County and the individual members, employees, and agents thereof in their official capacities.

E. Additional Insurance may be required on an individual basis for extra hazardous contracts and specific service agreements. If such additional insurance is required for a specific contract, that requirement will be described in the "Special Conditions" of the contract specifications.

F. Construction Insurance: The Contractor at his own cost and expense shall provide and maintain the applicable construction insurance until the contract is accepted by the Board of Greene County Commissioners. This coverage shall be written for one hundred percent (100%) of the completed value, covering the Commissioners of Greene County as the insured, with a deductible of not more than $5,000. The Contractor shall provide the original and duplicate policy to the County (unless the County shall accept, in lieu thereof, all contained endorsements including all applicable provisions and coverage's).

1. For construction of new buildings: "Builders Risk Form" - All Risk Form with an extension of building coverage to include personal property of others in the care, custody and control of the insured, and shall include a flat premium endorsement.
2. For additions or repairs of existing buildings or structures: "Builders Risk Completed Value Form," covering Contractors, interest in improvements, repairs, additions, alterations to completed buildings, and subject to the coverage's described in Item 1 above.
3. For construction of bridges, viaducts, All Risk Contract, with flat premium endorsement.

**4.1C.2***If any of the Property and Casualty insurance requirements are not complied with at their renewal dates, payments to the Contractor will be withheld until those requirements have been met, or at the option of the County, the County may pay the Renewal Premium and withhold such payments from any monies due the Contractor.

**4.1C.3***All property losses shall be made payable to and adjusted with the County.

**4.1C.4***All policies and certificates of insurance shall be approved by the Greene County Risk Management Committee prior to the inception of any work.

**4.1C.5***Other coverage's may be required by Greene County based on specific needs. If such other coverage's are required for a specific contract, those coverage's will be described in the "Special Conditions" of the contract specifications.

**4.1C.6***If at any time any of the foregoing policies shall be or become unsatisfactory to the County, as to form or substance, or if a company issuing any such policy shall be or become unsatisfactory to the County, the Contractor shall upon notice to that effect from the County promptly obtain a new policy, submit the same to the Prosecuting Attorney for approval and submit a certificate thereof as hereinabove provided. Upon failure of the Contractor to furnish, deliver and maintain such insurance as above provided, this contract, at the election of the County, may be forthwith declared suspended, discontinued or terminated. Failure of the Contractor to take out and/or maintain or the taking out and/or maintenance of any required insurance, shall not relieve the Contractor from any liability under the contract, nor shall the insurance requirements be construed to conflict with or otherwise limit the obligations of the Contractor concerning indemnification.

**4.1C.7***In the event that claims in excess of the insured amount provided herein, are filed by reason of any operations under the contract, the amount of excess of such claims, or any portion thereof, may be withheld from payment due or to become due to the Contractor until such time as the Contract shall furnish such additional security covering such claims as may be determined by Greene County.

**4.1C.8***All policies and certificates of insurance of the Contractor shall contain the following clauses:

1. Insurers shall have no right of recovery or subrogation against Greene County (including its agents and agencies as aforesaid), it being the intention of the parties that the insurance policies so affected shall protect both parties and be primary coverage for any and all losses covered by the above-described insurance.
2. The clause "other insurance provisions" in a policy in which the Commissioners of Greene County is named insured, shall not apply to Greene County.
3. The insurance companies issuing the policy or policies shall have no recourse against Greene County (including its agents and agencies as aforesaid) for payment of any premiums or for assessments under form of policy.
4. Any and all deductibles in the above-described insurance policies shall be assumed by and be for the account of, and at the sole risk of the Contractor.

**4.1C.9*** The following Indemnification Agreement shall be, and is hereby, a provision of the contract and shall be endorsed on the reverse side of all certificates of insurance.
*"The Contractor agrees to protect, defend, indemnify and hold Greene County and its officers, employees and agents free and harmless from and against any and all losses, penalties, damages, settlements, costs, charges, professional fees, or other expenses or liabilities of every kind and character arising out of or relating to any and all claims, liens, demands, obligations, actions, proceedings, or causes of action of every kind and character in connection with or arising directly out of this agreement and/or the performance hereof. Without limiting the generality of the foregoing, any and all such claims, etc., relating to personal injury, death, damage to property, defects in materials or workmanship, actual or alleged infringement of any patent, trademark, copyright (or application for any thereof) or of any other tangible or intangible personal or property right, or any actual or alleged violation of any applicable statute, ordinance, administrative order, rule or regulation, or decree of any court, shall be included in the indemnity hereunder. The Contractor further agrees to investigate, handle, and respond to, provide expense and agrees to bear all other costs and expenses related thereto, even if it (claims, etc.) is groundless, false or fraudulent."*

**4.2*LAWS, ORDINANCES AND REGULATIONS**

The Contractor shall keep himself fully informed of and shall carefully observe and comply with all federal, state, county, city, and local laws, ordinances, rules, permits, licenses, or inspections; the employment of and payment for, all labor; the legal rights of all workers employed under this construction; and any other items which in any manner affect the conduct of the work; and all such orders or decrees that exist at present, or those which may be enacted later, or bodies or tribunals having any jurisdiction or authority over the work, and he will be required to indemnify and save harmless the County and all his officers and agents against any claim or liability arising from or based upon any violation of any such law, ordinance, regulation, order or decree whether by himself or his employees. Should the Contractor at any time, find that any requirement of these specifications is at variance with applicable laws, ordinances, or building code requirements, he shall promptly notify the County, and any necessary adjustment of the construction will be made.
The Contractor will be required to give all notices, and pay all fees for any and/or all permits, licenses, or inspections necessary for the prosecution of the construction.

**4.3*GUARANTEE OF WORK**

The Developer shall guarantee all the work for a period of one (1) year from the date of the seventy-five percent (75%) bond release. A one-year anniversary inspection shall be scheduled at a minimum of eleven (11) months from the date of the seventy-five percent (75%) bond release. The contractor/bond surety shall be held liable for the punch list items identified at the one-year anniversary inspection.

The Developer will be required during the life of this guarantee to make all repairs or changes in the guaranteed work, which in the opinion of the County are necessary.

The Developer shall, promptly upon receipt of notice from the County and without expense to the County, remove and replace all unsatisfactory work with suitable materials and equipment.

Failure by the Developer to proceed with the terms of the guarantee shall be sufficient reason for the County to have the defects corrected, and the Developer shall be liable for all expenses incurred by the corrections.

Any or all special guarantees applicable to definite parts of work or equipment shall also be subject to the terms of this Section during the first year of the life of such special guarantees.

## 4.4*PROTECTION OF EXISTING UNDERGROUND UTILITY FACILITIES (ORC Section 153.64)

The Owner, prior to advertising for bids, must contact the Underground Utility Protection Service and owners of public utilities who are not members of that Service for the existence of all utilities in the area. The Owner must then include in the plans and specifications the identity and location of such facilities as well as the name, address and telephone number of each utility that does not subscribe to an Underground Utility Protection Service. Within ten (10) calendar days after award of bid, the Owner must notify in writing all owners of underground utility facilities who are known to be in the project area of the name, address and telephone number of the Contractor awarded the work.

The Contractor shall, at least two working days (excluding Saturdays, Sundays and legal holidays) prior to starting work in the area of the improvement of the utility lines as shown on the plans and specifications notify the Underground Utility Protection Service and the owners who are shown on the plans not to be Underground Utility Protection Service members. Such notice may be in writing, by telephone, or in person of its intent to start construction operations. If the notice is given in writing by certified mail, the return receipt signed by any person to whom the notice may be given shall be conclusive proof of notice.

After commencing construction, the contractor shall report immediately to the owner or operator of the utility any break or leak in its lines or any dent, gouge, groove, or other damage to the lines or their coating or cathodic protection. The Contractor must also alert the nearby occupants of any emergency he may create or discover in connection with excavating in and around the utilities.

The owners of utilities in the project area shall, within forty-eight (48) hours (excluding Saturdays, Sundays and legal holidays) after notice is received from the Contractor that it intends to start construction, mark or otherwise designate the location of its underground utilities in the construction area in such a manner as to indicate their course together with their approximate depth at which they were installed. The markings shall be coordinated to be approximately two (2) days ahead of construction.

If the Contractor complies with the requirements imposed upon it by statute and encounters underground utility facilities that should have been shown on the plans and specifications had the owner properly contacted the utilities, then, upon notification to the Owner, the Contractor is entitled to an increase in the contract price for any additional work as well as a time extension for any delays.

If the Contractor complies with the requirements imposed upon it by the statute and if the utility erroneously marks the lines, then, so long as the public authority had complied with its obligations prior to construction, the Contractor is not responsible to damage to the utilities encountered that are improperly marked.

Any anticipated temporary/permanent relocation of the utilities that is deemed necessary by the Owner shall be arranged by it with the utility prior to the start of construction. If any relocation is necessary, the utilities shall be given a reasonable time to move such facilities unless the Contractor agrees with the facility to coordinate relocation with its construction operations.

## 4.5*PROTECTING EXISTING BUILDINGS AND STRUCTURES

The Contractor shall, at his own expense, shore up and protect any building, bridges, tracks, or other public or private structures which may be encountered or endangered in the prosecution of the work. He shall repair and make good any damage caused to any such property by reason of his operations.

## 4.6*MONUMENTS AND LANDMARKS

The Contractor or any of his employees shall not molest or remove any monuments, iron survey pins, or landmarks. Any monument, iron survey pins, or landmark so removed will be replaced by the Contractor.

## 4.7*ACCIDENT PREVENTION

The Contractor shall be held responsible for all accidents and shall indemnify and protect the County from all suits, claims and action brought against it, and all cost for liability to which the County may be put for any injury or alleged injury to the person or property of another resulting from negligence or carelessness in the performance of the work, or in caring for the same, or from any improper or inferior workmanship or inferior materials used. All loss or damage to the work arising from fire, floods, storms, or other natural causes, or from any detention, obstruction or difficulties which may be encountered in the prosecution of the work shall be sustained by the Contractor.

The Contractor shall exercise every precaution at all times for the protection of persons, (including employees) and property, and hazardous condition shall be guarded against or eliminated. This protection includes sheeting and shoring, barricades, guards, night watchmen, and warning lights, as needed.

The Contractor shall comply with the safety provisions of applicable laws and building and construction codes. All hazards connected with the use or installation of machinery and equipment shall be guarded against or eliminated in accordance with the safety provisions of the latest edition of the "Manual of Accident Prevention in Construction," published by the Associated General Contractors of America and the revised "Specific Safety Requirements relating to Building and Construction Work," published in IC-3, by the Industrial Commission and the Department of Industrial Relations, state of Ohio, to the extent that such provisions are not in contravention of applicable laws.

The Contractor shall have available to all construction crews for immediate use the articles as outlined in the publication of the American Red Cross "First Aid to the Injured." The Contractor shall comply with the U.S. Department of Labor, Occupational Safety and Health Act of 1970.

The Contractor shall provide liability insurance for the above in the name of the Owner.

# A SUMMARY OF DRAWINGS, FORMS, LISTS and TABLES

## Table of Contents

### Part A - Regulations


| *Section* | *Description* | *Page No.* |
|---|---|---|
| 3 | Double Check Valve Assemblies (LIST) | A-3-14 |
| 3 | Reduced Pressure Detector Assemblies (LIST) | A-3-15 |
| 4 | Greene County Beavercreek Wastewater Treatment Facility Waste Certificate of Origin (FORM) | A-4-7 |
| 4 | Application to Discharge Industrial Wastewater to Greene County Publicly Owned Treatment Works (FORM) | A-4-21 |


### Part B - Construction Materials


| *Section* | *Description* | *Page No.* |
|---|---|---|
| 2 | Standard Installation for Residential (5/8" x 3/4" Meter) Water Service Connection (DRAWING) | B-2-4 |
| 2 | Standard Installation for Residential Full 3/4" Meter Water Service Connection (DRAWING) | B-2-5 |
| 2 | Standard Installation for Residential 1" Meter Water Service Connection (DRAWING) | B-2-6 |
| 2 | "Model" Public Water Supply Connection for Irrigation Purposes Only (Install in Existing Meter Pit) (DRAWING) | B-2-7 |
| 2 | Standard Installation for Single 1 1/2" Water Service Connection (For Off-Road Use Only) (DRAWING) | B-2-9 |
| 2 | Standard Installation for Single 2" Water Service Connection (For Off-Road Use Only) (DRAWING) | B-2-10 |
| 2 | Standard Installation for Single 3" or Larger Water Service Connection (For Off-Road Use Only) (DRAWING) | B-2-11 |
| 2 | Fire Protection and Domestic Meter Pit Detail (DRAWING) | B-2-12 |
| 2 | Air Release Manhole Frame and Cover (DRAWING) | B-2-17 |
| 2 | Fire Hydrant Details (TABLE NO. 1) | B-2-18 |
| 3 | Cast Iron Manhole Frame (DRAWING) | B-3-5 |
| 3 | Cast Iron Manhole Cover (DRAWING) | B-3-6 |
| 3 | Watertight Manhole Frame and Cover (DRAWING) | B-3-7 |
| 4 | Concrete Septic Tank Detail (DRAWING) | B-4-3 |
| 5 | Minimum Wall Thickness for Steel Casing Pipe (TABLE) | B-5-2 |


### Part C - Construction Procedures


| *Section* | *Description* | *Page No.* |
|---|---|---|
| 1 | Concrete Encasement Detail (DRAWING) | C-1-4 |
| 1 | Concrete Cradle Detail (DRAWING) | C-1-5 |
| 2 | Allowable Leakage per 1000 ft. of Pipeline (DRAWING) | C-2-3A |
| 2 | Allowable Leakage in Water Mains (for 18-Foot Nominal Lengths) (TABLE) | C-2-5 |
| 2 | Allowable Leakage in Water Mains (for 5.49 Meters Nominal Lengths) (TABLE) | C-2-6 |
| 2 | Butterfly Valves for Direct Burial (DRAWING) | C-2-8 |
| 2 | Fire Hydrant Installation Using Anchoring Pieces (DRAWING) | C-2-10 |
| 2 | Profile View - Fire Hydrant Installation (DRAWING) | C-2-11 |
| 2 | Approved Fire Hydrant Branch Assembly Diagrams - Figure 1 (DRAWING) | C-2-12 |

## Part C - Construction Procedures


| *Section* | *Description* | *Page No.* |
|---|---|---|
| 2 | Approved Fire Hydrant Branch Assembly Diagrams - Figure 2 (DRAWING) | C-2-13 |
| 2 | Approved Fire Hydrant Branch Assembly Diagrams - Figures 3 and 4 (DRAWING) | C-2-14 |
| 2 | Approved Fire Hydrant Branch Assembly Diagrams - Figures 5 and 6 (DRAWING) | C-2-15 |
| 2 | Approved Fire Hydrant Branch Assembly Diagrams - Figures 7 and 8 (DRAWING) | C-2-16 |
| 2 | Approved Fire Regulations and Specifications | |
| 2 | Hydrant Branch Assembly Diagrams - Figures 9 and 10 (DRAWING) | C-2-17 |
| 2 | Concrete Thrust Blocking (DRAWING) | C-2-19 |
| 2 | Concrete Anchor Blocking (DRAWING) | C-2-20 |
| 2 | Minimum Bearing Surface Area for Concrete Thrust Blocking (Sq. M.) (TABLE) | C-2-21 |
| 2 | Minimum Volume of Concrete for Concrete Anchor Blocking (Cu. M.) (TABLE) | C-2-21 |
| 2 | Standard Thrust and Anchor Blocking Diagrams Plan View - Bend and Plan View - Wye (DRAWING) | C-2-22 |
| 2 | Standard Thrust and Anchor Blocking Diagrams Plan View - Tee and Plan View - Tee, One Run Plugged (DRAWING) | C-2-23 |
| 2 | Standard Thrust and Anchor Blocking Diagrams Profile View - Vertical Bends and Plan View - Plugged Ends (DRAWING) | C-2-24 |
| 2 | Required Length of Restrained Joints for Water Main Installations (DRAWING) | C-2-25 |
| 2 | Required Length of Restrained Joints for Water Main Installations (DRAWING) | C-2-26 |
| 2 | Standard Installations for Water Service Connections into Water Mains (DRAWING) | C-2-27 |
| 3 | Illustration of Pipeline Bedding and Backfill Requirements (Pressure Pipelines and Gravity Pipelines) (DRAWING) | C-3-2 |
| 3 | Sewer Pipe Installation (Vitrified Clay Pipe and Reinforced Concrete Pipe and PVC and ABS Pipe Only) (DRAWING) | C-3-3 |
| 3 | Branching Sewer Lateral for Two-Family Residence (DRAWING) | C-3-6 |
| 3 | Drop Connection (DRAWING) | C-3-7 |
| 3 | Detail for Vented Watertight Manhole (DRAWING) | C-3-8 |
| 3 | Test for Leakage (Infiltration) (TABLE) | C-3-10 |
| 3 | Test for Leakage (Exfiltration) (TABLE) | C-3-11 |
| 3 | ASTM C 828 Air Test Table (VCP) (TABLE) | C-3-12 |
| 3 | ASTM C 924 Concrete Pipe - Minimum Test Time for Various Pipe Sizes (TABLE) | C-3-12 |
| 3 | ASTM C 924 Concrete Pipe - Allowable Air Loss for Various Pipe Sizes (TABLE) | C-3-12 |
| 3 | Specification Time Required for a 1.0 PSIG Pressure Drop for Size and Length of Pipe Indicated for Q = 0.0015 (TABLE) | C-3-13 |
| 3 | Air Test Data Sheet (FORM) | C-3-14 & C-3-15 |